DAB WATER•TECHNOLOGY

IN-LINE PUMPS

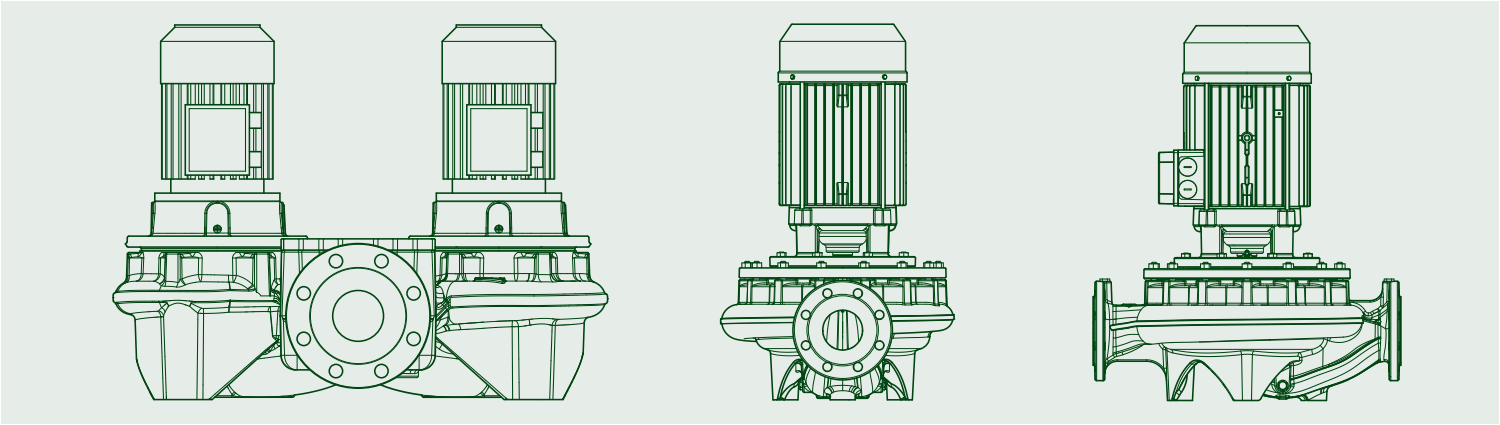

TECHNICAL CATALOGUE

CERTIFICATIONS

IQNet®

THE INTERNATIONAL CERTIFICATION NETWORK

CERTIFICATE

***CISQ/IMQ** has issued an IQNet recognized certificate that the organization:*

DWT HOLDING SPA

VIA MARCO POLO 14 - 35035 MESTRINO (PD)
BRENDOLA (VI) - CASTELLO DI GODEGO (TV) - BIENTINA (PI) -
VAL LIONA (VI) - PRC CHINA - HUNGARY

has implemented and maintains a

Quality Management System

for the following scope:

Design, production, sale and assistance of components and electronic controls for pumps, electropumps and pump sets for cold and hot water for civil, industrial and agricultural use

Further clarifications regarding the applicability of ISO 9001:2015 requirements may be obtained by consulting the organization

which fulfills the requirements of the following standard:

ISO 9001:2015

Issued on: **2018 - 05 - 21**
Expires on: ***2021 - 05 - 27***

This attestation is directly linked to the IQNet Partner's original certificate and shall not be used as a stand-alone document

Registration Number: IT - 824

Alex Stoichitoiu
President of IQNET

Ing. Claudio Provetti
President of CISQ

IQNet Partners*:
AENOR *Spain* AFNOR Certification *France* APCER *Portugal* CCC *Cyprus* CISQ *Italy*
CQC *China* CQM *China* CQS *Czech Republic* Cro Cert *Croatia* DQS Holding GmbH *Germany* FCAV *Brazil*
FONDONORMA *Venezuela* ICONTEC *Colombia* Inspecta Sertifiointi Oy *Finland* INTECO *Costa Rica*
IRAM *Argentina* IQA *Japan* KFQ *Korea* MIRTEC *Greece* MSZT *Hungary* Nemko AS *Norway* NSAI *Ireland*
NYCE-SIGE *México* PCBC *Poland* Quality Austria *Austria* RR *Russia* SII *Israel* SIQ *Slovenia*
SIRIM QAS International *Malaysia* SQS *Switzerland* SIRAC *Romania* TEST St Petersburg *Russia* TSE Turkey YUQS *Serbia*
IQNet is represented in the USA by: AFNOR Certification, CISQ, DQS Holding GmbH and NSAI Inc.

* The list of IQNet partners is valid at the time of issue of this certificate. Updated information is available under www.iqnet-certification.com

All. 1 di 1
Ann. 1 of 1

CISQ

www.imq.it

CISQ is a member of IQNet

THE INTERNATIONAL CERTIFICATION NETWORK
www.iqnet-certification.com

IQNet, the association of the world's first class certification bodies, is the largest provider of management System Certification in the world.
IQNet is composed of more than 30 bodies and counts over 150 subsidiaries all over the globe.

ALLEGATO CERTIFICATO n. **9101.COGE**

ANNEX CERTIFICATE

(*) Unità Operative:
(*) Operative Units:

DAB PUMPS SPA
VIA BONANNO PISANO 1 - 56031 BIENTINA (PI)

DAB PUMPS SPA
VIA DEL LAVORO 3 - 36040 VAL LIONA (VI)

DAB PUMPS QINGDAO CO. LTD
40 KAITUO ROAD, QINGDAO DEVELOPMENT ZONE - SHANGDONG PROVINCE, PRC CHINA

DAB PUMPS HUNGARY KFT
BUDA ERNO H - 8800 NAGYKANISZA HUNGARY

DATE:	PRIMA CERTIFICAZIONE *FIRST CERTIFICATION*	EMISSIONE CORRENTE *CURRENT ISSUE*	SCADENZA *EXPIRY*
	1995-07-17	2018-05-21	2021-05-27

IMQ S.p.A. - VIA QUINTILIANO, 43 - 20138 MILANO ITALY
Management Systems Division - Flavio Ornago

ACCREDIA
SGQ N° 005 A

IAF: 18, 19, 29

La validità del certificato è subordinata a sorveglianza annuale e riesame completo del Sistema di Gestione con periodicità triennale.
The validity of the certificate is submitted to annual audit and a reassessment of of the entire management System within three year

IMQ
Organismo di Certificazione Federato CISQ
www.imq.it

FEDERAZIONE CISQ
www.cisq.com
CISQ è la Federazione Italiana di Organismi di Certificazione dei sistemi di gestione aziendale.
CISQ is the Italian Federation of management system Certification Bodies.

CISQ

www.imq.it

CISQ is a member of IQNet

THE INTERNATIONAL CERTIFICATION NETWORK
www.iqnet-certification.com

IQNet, the association of the world's first class certification bodies, is the largest provider of management System Certification in the world.
IQNet is composed of more than 30 bodies and counts over 150 subsidiaries all over the globe.

CERTIFICATO N.
CERTIFICATE N. **9101.COGE**

SI CERTIFICA CHE IL SISTEMA QUALITA' DI
WE HEREBY CERTIFY THAT THE QUALITY SYSTEM OPERATED BY

DWT HOLDING SPA

VIA MARCO POLO 14 - 35035 MESTRINO (PD)

UNITA' OPERATIVE / *OPERATIVE UNITS*

DAB PUMPS SPA
VIA MARCO POLO 14 - 35035 MESTRINO (PD)
DAB PUMPS SPA
VIA EINAUDI 2 - 36040 BRENDOLA (VI)
DAB PUMPS SPA
VIA E. FERMI 6-8-10 - 31030 CASTELLO DI GODEGO (TV)

Vedere gli Allegati per le altre Unità Operative (n° 1 pagina)
View the Annexes for the other Operative Units (n° 1 page)

E' CONFORME ALLA NORMA / *IS IN COMPLIANCE WITH THE STANDARD*

ISO 9001:2015

PER LE SEGUENTI ATTIVITA' / *FOR THE FOLLOWING ACTIVITIES*

Progettazione, produzione, commercializzazione e assistenza di componenti e controlli elettronici per pompe, elettropompe e gruppi di pompaggio per acqua fredda e calda ad uso civile, industriale ed agricolo
Design, production, sale and assistance of components and electronic controls for pumps, electropumps and pump sets for cold and hot water for civil, industrial and agricultural use

IL PRESENTE CERTIFICATO E' SOGGETTO AL RISPETTO DEL REGOLAMENTO PER LA CERTIFICAZIONE DEI SISTEMI DI GESTIONE
THE USE AND THE VALIDITY OF THE CERTIFICATE SHALL SATISFY THE REQUIREMENTS OF THE RULES FOR CERTIFICATION OF MANAGEMENT SYSTEMS

DATE:	PRIMA CERTIFICAZIONE *FIRST CERTIFICATION*	EMISSIONE CORRENTE *CURRENT ISSUE*	SCADENZA *EXPIRY*
	1995-07-17	2018-05-21	2021-05-27

IMQ S.p.A. - VIA QUINTILIANO, 43 - 20138 MILANO ITALY
Management Systems Division - Flavio Ornago

ACCREDIA
SGQ N° 005 A

IAF: 18, 19, 29

La validità del certificato è subordinata a sorveglianza annuale e riesame completo del Sistema di Gestione con periodicità triennale.
The validity of the certificate is submitted to annual audit and a reassessment of of the entire management System within three year

IMQ
Organismo di Certificazione Federato CISQ
www.imq.it

FEDERAZIONE CISQ
www.cisq.com
CISQ è la Federazione Italiana di Organismi di Certificazione dei sistemi di gestione aziendale.
CISQ is the Italian Federation of management system Certification Bodies.

CONTENTS

IN-LINE PUMPS

ALM / ALP

PAGE 3

KLM / KLP / DKLM / DKLP

PAGE 8

CM / CM-G / DCM / DCM-G

PAGE 29

CP / CP-G / DCP / DCP-G

PAGE 75

K-HA

ONLY FOR EXTRA MARKETS EU EXCEPT RUSSIA

PAGE 112

HYDRAULIC EFFICIENCY

PAGE 115

ACCESSORIES

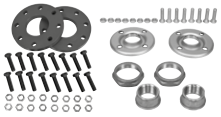

PAGE 121

DAB PUMPS reserves the right to make modifications without notice.

TECHNICAL DATA

Operating range:
from 0,6 to 8,4 m^3/h with head up to 21 metres
Pumped liquid: clean, free of solids and abrasives, non-viscous, non-aggressive, non-crystallised and chemically neutral, with properties similar to water. Maximum, glycol content 30% (for other glycol percentages contact Technical Support)
Pumped liquid temperature range: from -15 °C to +120 °C
Maximum ambient temperature: +40 °C
Maximum operating pressure: 10 bar (1000 kPa)
Unions on request: see the final ACCESSORIES table
Special executions on requests: alternative voltages and frequencies

APPLICATIONS
Hot or cold water circulation pump with in-line ports, suitable for installation directly on the pipework of civil and industrial heating, air conditioning, refrigeration, and sanitary water systems.

CONSTRUCTION FEATURES OF THE PUMP
Cast iron pump body and motor support for ALM 500 and ALP 2000, bronze for ALM 200 and ALP 800.
1" 1/2 M-GAS suction and delivery ports for ALM 200 and ALP 800, and 2" M-GAS for ALM 500 and ALP 2000. Technopolymer impeller. Carbon/ceramic mechanical seal.

CONSTRUCTION FEATURES OF THE MOTOR
External ventilation cooling, closed, asynchronous type, with four poles for the ALM version, and two poles for the ALP version.
Rotor running on permanently lubricated ball bearings, oversized to ensure low noise and durability.
Standard built-in thermo-amperometric protection. Capacitor permanently fitted on single phase versions.
For the protection of the three-phase motor, we recommend the use of remote overload cut-outs, in compliance with current local regulations.
Construction according to CEI 2-3.
Protection class: IP 55
Insulation class: F

Standard voltage:	single-phase	220-240 V, 50 Hz.
	three-phase	230/400 V, 50 Hz

MATERIALS

N.	PARTS*	MATERIALS	MODELS
1	PUMP BODY	BRONZE G Cu Sn5 Zn5 Pb5 UNI 7013/8ª-72	ALM 200 - ALP 800
		CAST IRON 250 UNI ISO 185	ALM 500 - ALP 2000
3	SUPPORT	BRONZE G Cu Sn5 Zn5 Pb5 UNI 7013/8ª-72	ALM 200 - ALP 800
		CAST IRON 250 UNI ISO 185	ALM 500 - ALP 2000
4	IMPELLER	TECHNOPOLYMER	
7	SHAFT WITH ROTOR	AISI 303 STAINLESS STEEL X10 CrNiS 1809 UNI 6900/71	
16	MECHANICAL SEAL	CARBON / CERAMIC	
28	OR RING	EPDM RUBBER	

* In contact with the liquid

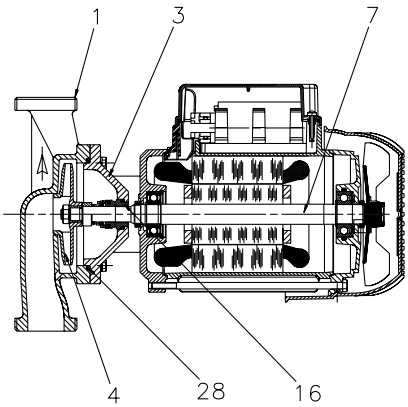

ALM / ALP

IN-LINE PUMPS

– Denomination index:
(example)

AL P 2000 M

Series

M = 4-pole motor
P = 2-pole motor

Maximum head (cm)

M = single-phase motor
T = three-phase motor

Fixed horizontal installation for ALM 200 and ALP 800; both horizontal and vertical installation for ALM 500 and ALP 2000.

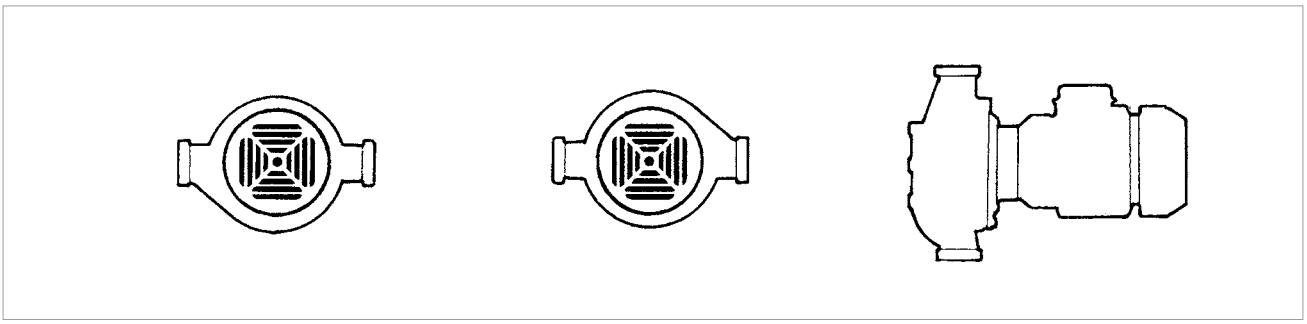

DAB PUMPS reserves the right to make modifications without notice.

PERFORMANCE RANGE

The performance curves are based on kinematic viscosity values = 1 mm^2/s and density equal to 1000 kg/m^3. Curve tolerance according to ISO 9906.

GRAPHIC SELECTION TABLE

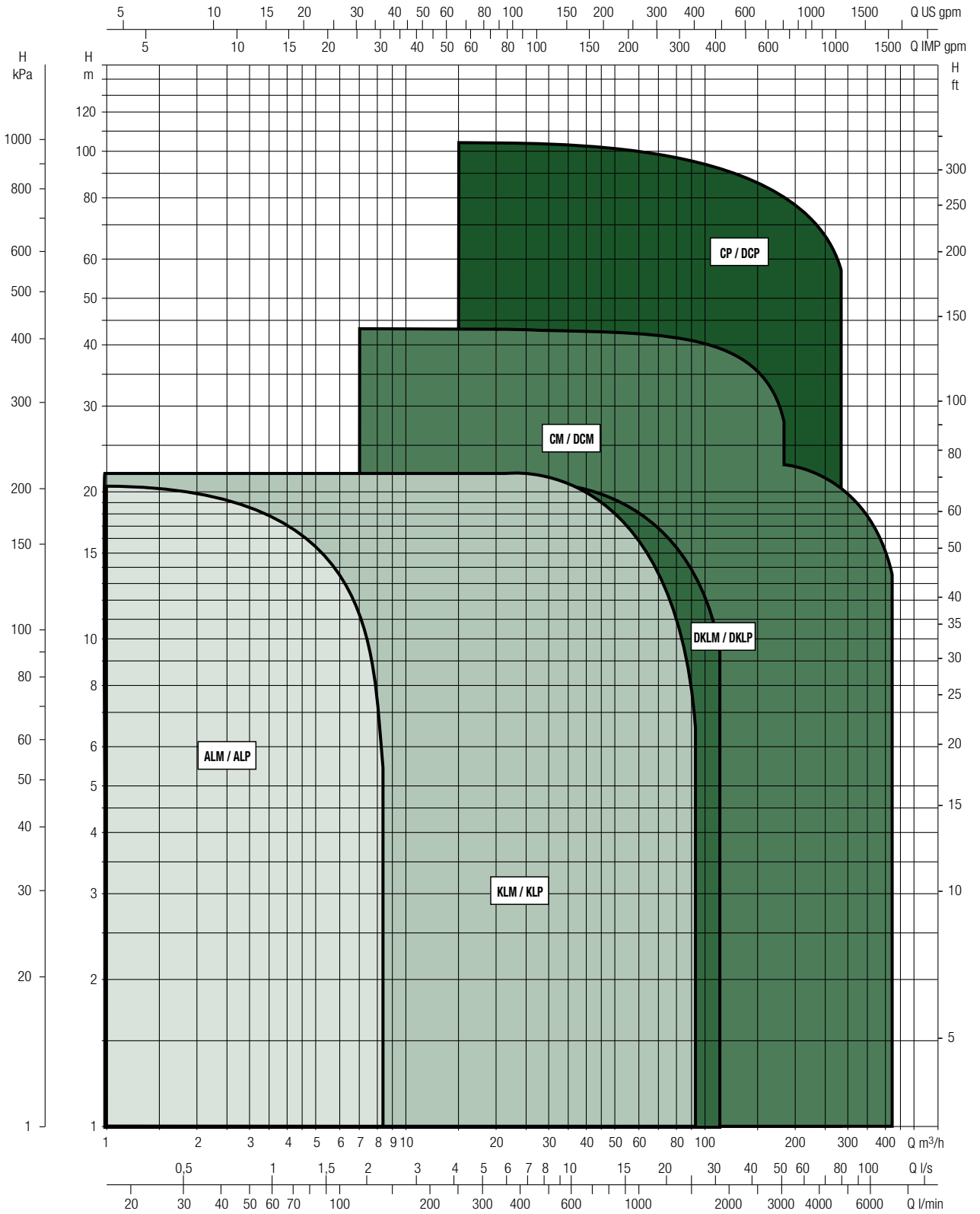

ALM 200 / ALP 800 - IN-LINE PUMPS

Pumped liquid temperature range: from -15 °C to +120 °C - Maximum ambient temperature: +40 °C

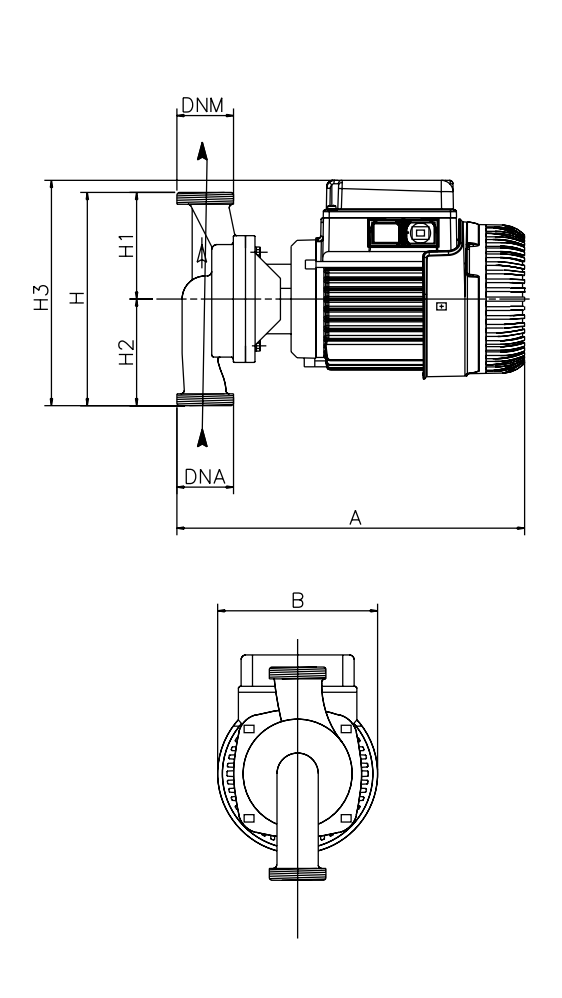

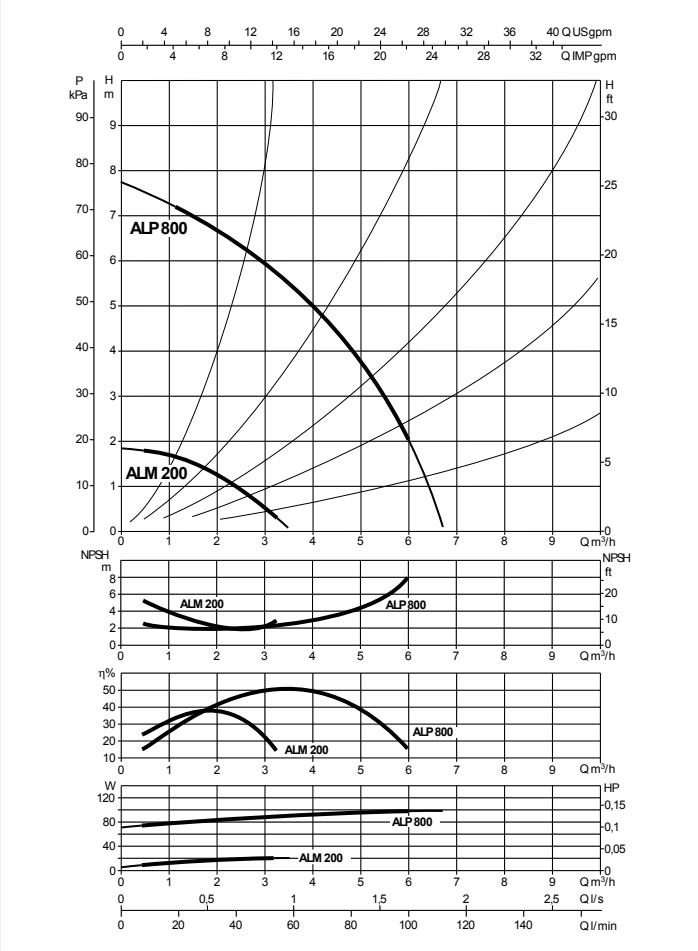

The performance curves are based on kinematic viscosity values = 1 mm²/s and density equal to 1000 kg/m³. Curve tolerance according to ISO 9906.

MODEL	Q=m³h	0	1,2	2,4	3,6	4,8	6
	Q=l/min	0	20	40	60	80	100
ALM 200 M - T	H (m)	1,9	1,65	1			
ALP 800 M - T		7,7	7,2	6,3	5,8	3,9	2

MODEL	CENTRE DISTANCE	ELECTRICAL DATA								
		POWER INPUT 50 Hz	POLES	n r.p.m.	P1 MAX KW	P2 NOMINAL		In A	CAPACITOR	
						kW	HP		µF	Vc
ALM 200 M	180	1x220-240 V ~	4	1480	0,14	0,059	0,08	0,7	8	450
ALM 200 T	180	3x230-400V~	4	1475	0,08	0,059	0,08	0,53-0,3	-	-
ALP 800 M	180	1x220-240 V ~	2	2925	0,24	0,37	0,5	1,4	10	450
ALP 800 T	180	3x230-400V~	2	2915	0,2	0,37	0,5	1,2-0,7	-	-

MODEL	A	B	C	L	IØ	H	H1	H2	H3	DNA NPT	DNM NPT	PACKING DIMENSIONS			VOLUME (m³)	WEIGHT kg
												L/A	L/B	H		
ALM 200 M - T	300	136	-	-	-	180	90	90	190	1 1/2" G-M	1 1/2" G-M	332	202	257	0,017	7,5
ALP 800 M - T	300	136	-	-	-	180	90	90	190	1 1/2" G-M	1 1/2" G-M	332	202	257	0,017	7,5

ALM 500 / ALP 2000 - IN-LINE PUMPS

Pumped liquid temperature range: from -15 °C to +120 °C - Maximum ambient temperature: +40 °C

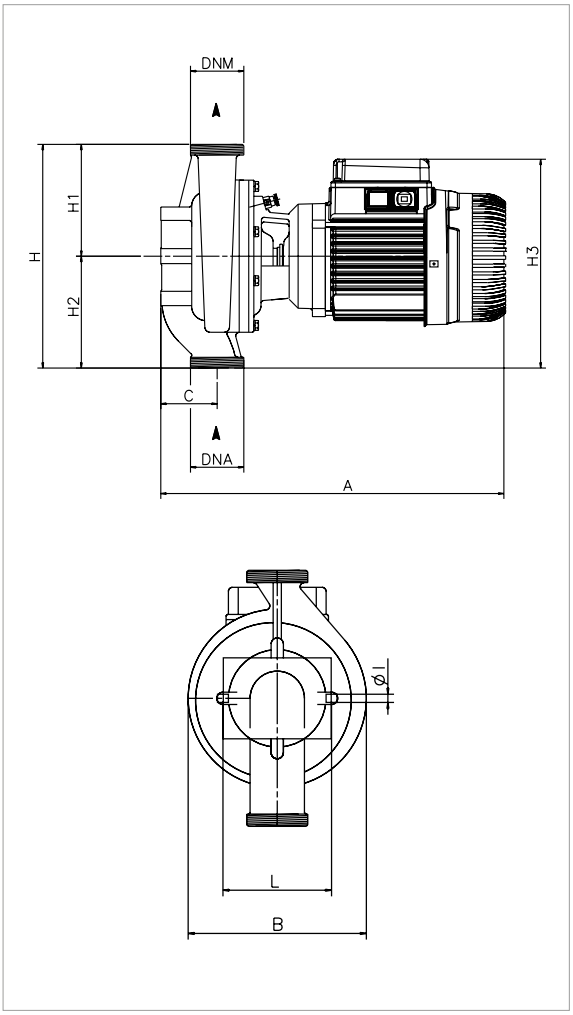

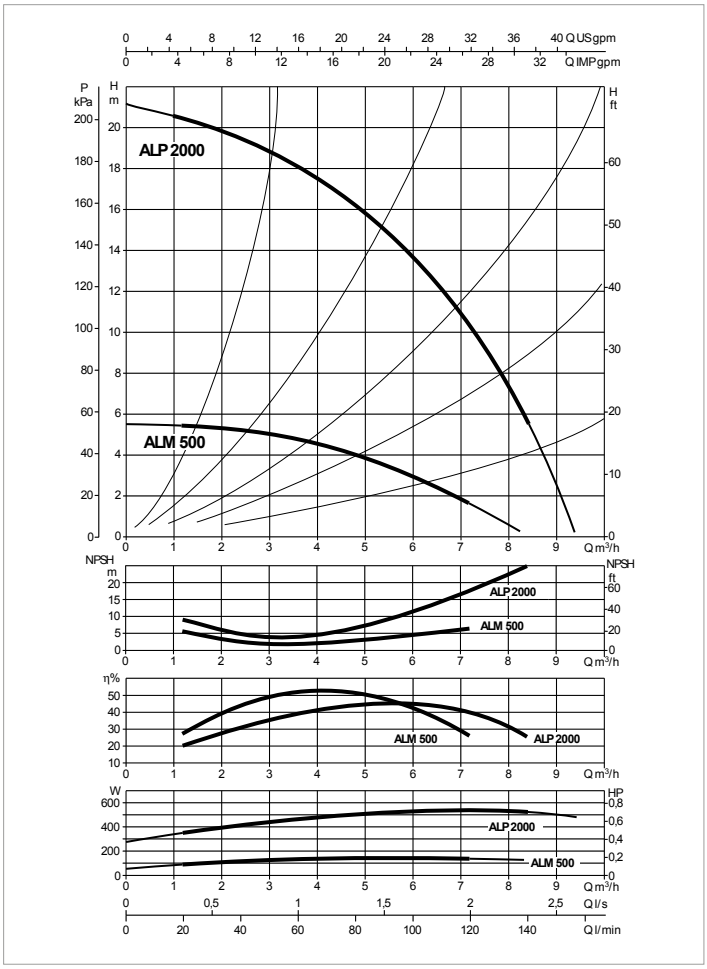

The performance curves are based on kinematic viscosity values = 1 mm²/s and density equal to 1000 kg/m³. Curve tolerance according to ISO 9906.

MODEL	Q=m³h	0	1,2	2,4	3,6	4,8	6	7,2	8,4
	Q=l/min	0	20	40	60	80	100	120	140
ALM 500 M - T	H (m)	5,5	5,4	5,3	4,8	4,1	3	1,5	
ALP 2000 M - T		21,1	20,6	19,6	18	16	13,8	10,5	5,3

MODEL	CENTRE DISTANCE	ELECTRICAL DATA								
		POWER INPUT 50 Hz	POLES	n r.p.m.	P1 MAX W	P2 NOMINAL		In A	CAPACITOR	
						kW	HP		µF	Vc
ALM 500 M	250	1x220-240 V ~	4	1425	0,22	0,25	0,33	1	8	450
ALM 500 T	250	3x230-400V~	4	1465	0,19	0,25	0,33	1-0,6	-	-
ALP 2000 M	250	1x220-240 V ~	2	2870	0,87	0,55	0,75	3,7	16	450
ALP 2000 T	250	3x230-400V~	2	2830	0,74	0,55	0,75	2,3-1,3	-	-

MODEL	A	B	C	L	IØ	H	H1	H2	H3	DNA NPT	DNM NPT	PACKING DIMENSIONS			VOLUME (m³)	WEIGHT Kg
												L/A	L/B	H		
ALM 500 M - T	386	174	63	95	8	250	125	125	235	2" G-M	2" G-M	492	232	292	0,033	14,5
ALP 2000 M - T	386	174	63	95	8	250	125	125	235	2" G-M	2" G-M	492	232	292	0,033	14,5

KLM / KLP / DKLM / DKLP

IN-LINE PUMPS

TECHNICAL DATA

Operating range:
from 2 to 92 m^3/h with head up to 67 metres
Pumped liquid: clean, free of solids and abrasives, non-viscous, non-aggressive, non-crystallised and chemically neutral, with properties similar to water. Maximum, glycol content 30 % (for other glycol percentages contact Technical Support)
Pumped liquid temperature range: from -15 °C to +120 °C
Maximum ambient temperature: +40°C
Maximum operating pressure: 10 bar (1000 kPa)
Standard flanges:
DN 40, DN 50, DN 65, DN 80 - PN 6/PN 10 (4 holes)
Flanges on request: DN 80 - PN 16 (8 holes)
Counter flanges on request:
threaded DN 40, DN 50, DN 65 in PN 10
welded DN 40, DN 50, DN 65, in PN 10/PN 16 (4 holes)
welded DN 80 in PN 10/PN 16 (8 holes)
Special executions on requests: alternative voltages and frequencies

APPLICATIONS

Hot or cold water circulation pump with in-line ports, suitable for installation directly on the pipework of civil and industrial heating, air conditioning, refrigeration, and sanitary water systems.

CONSTRUCTION FEATURES OF THE PUMP

Pump body and motor support in cast iron.
PN 10 flanged suction and delivery ports with threaded holes for control manometers. To make replacement in existing systems easier, the pump can accept PN 6 counter flanges.
Technopolymer impeller.
Carbon/ceramic mechanical seal.
The pumps are available both in the single (KLM-KLP) and in the twin (DKLM-DKLP) versions.
For the single version a built in clapet valve in the delivery port is also included, to avoid water recirculation when the unit is idle. A blind flange is also supplied as a standard, to be used during maintenance of one of the two motors.
The twin version gives the possibility of alternating the operation of the pumps when a backup unit is required, or to have the two pumps operating simultaneously.

CONSTRUCTION FEATURES OF THE MOTOR

External ventilation cooling, closed, asynchronous type, with four poles for the KLM and DKLM versions, and two poles for the KLP and DKLP versions.
Rotor running on permanently lubricated ball bearings, oversized to ensure low noise and durability.
Standard built-in thermo-amperometric protection. Capacitor permanently fitted on single phase versions.
For the protection of the three-phase motor, we recommend the use of remote overload cut-outs, in compliance with current local regulations.
Construction according to CEI 2-3.
Protection class: IP 55
Insulation class: F

Standard voltage:	single-phase	220-240 V, 50 Hz.
	three-phase	230/400 V, 50 Hz

MATERIALS

N.	PARTS*	MATERIALS
1	PUMP BODY	CAST IRON 250 UNI ISO 185
3	SUPPORT	CAST IRON 250 UNI ISO 185
4	IMPELLER	TECHNOPOLYMER B
7	SHAFT WITH ROTOR	AISI 303 STAINLESS STEEL X10 CrNiS 1809 UNI 6900/71
16	MECHANICAL SEAL	CARBON / CERAMIC
26	OR RING	EPDM RUBBER

* In contact with the liquid

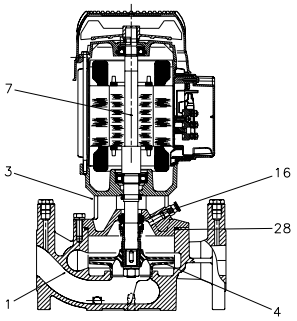

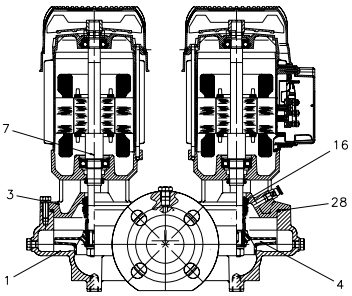

KLM / KLP / DKLM / DKLP

IN-LINE PUMPS

– Denomination index:
(example)

D KL P 80 / 1200 M

- Twin version
- Series
- M = 4-pole motor / P = 2-pole motor
- (DN) nominal diameter of the flanged ports
- Maximum head (cm)
- M = single-phase motor / T = three-phase motor

Installation: horizontal or vertical position, provided that the motor is always above the pump.

KLM / KLP

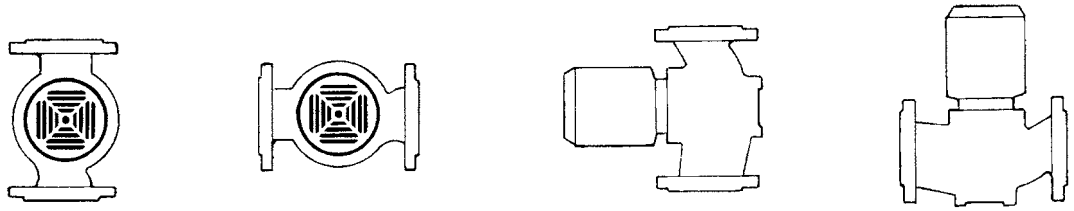

DKLM / DKLP

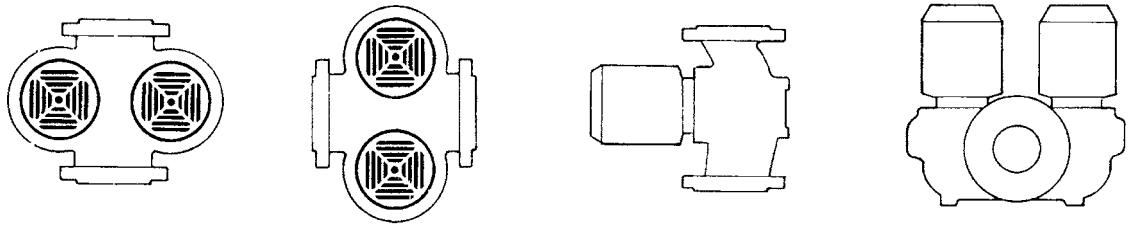

PERFORMANCE RANGE

The performance curves are based on kinematic viscosity values = 1 mm^2/s and density equal to 1000 kg/m^3. Curve tolerance according to ISO 9906.

GRAPHIC SELECTION TABLE

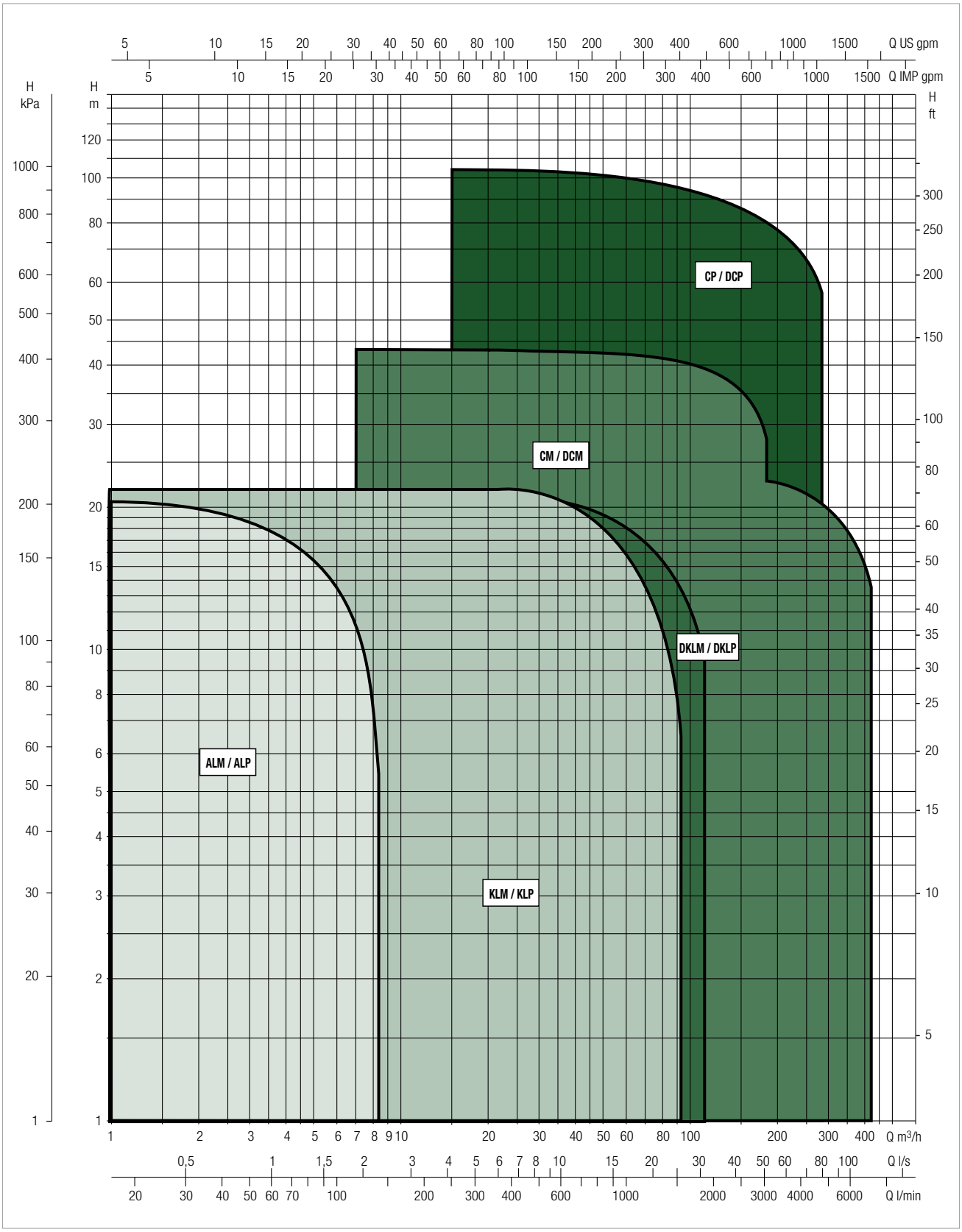

SELECTION TABLE - KLM / KLP

MODEL	Q=m³h	0	2,4	3,6	4,8	6	7,2	8,4	9,6	12	14,4	16,8	18	24	30	36	48	60
	Q=l/min	0	40	60	80	100	120	140	160	200	240	280	300	400	500	600	800	1000
KLM 40-300 M	H (m)	4,07	3,93	3,74	3,47	3,1	2,67	2,15	1,5									
KLM 40-300 T		4,07	3,93	3,74	3,47	3,1	2,67	2,15	1,5									
KLP 40-600 M		8,4	8,3	8,3	8,2	7,9	7,7	7,3	6,8	5,6	4	2,2						
KLP 40-600 T		8,3	8,2	8	7,9	7,7	7,4	7	6,6	5,4	3,8	2						
KLP 40-900 M		10,7	10,7	10,6	10,5	10,3	10	9,7	9,2	8,1	6,6	4,9	3,9					
KLP 40-900 T		10,6	10,6	10,4	10,3	10	9,7	9,3	8,8	7,6	6	4,4	3,4					
KLP 40-1200 M		14,3	13,9	13,7	13,5	13,2	12,9	12,5	12	10,8	9,2	7,1	6					
KLP 40-1200 T		13,9	13,4	13,2	13	12,6	12,3	11,8	11,3	9,9	8,2	6,2	5					
KLP 40-1600 M		16,5	16,2	15,9	15,6	15,3	14,9	14,5	14	12,9	11,3	9,3	8					
KLP 40-1600 T		16,5	16,2	15,9	15,6	15,3	14,9	14,5	14	12,9	11,3	9,3	8					
KLP 40-1800 M		18,8	18,3	18	17,6	17,2	16,7	16,2	15,6	14,1	12,4	10,3	9	2,2				
KLP 40-1800 T		18,9	18,5	18,2	17,8	17,5	17	16,6	16	14,7	13	11	9,9	2,7				

MODEL	Q=m³h	0	2,4	3,6	4,8	6	7,2	8,4	9,6	12	14,4	16,8	18	24	30	36	48	60
	Q=l/min	0	40	60	80	100	120	140	160	200	240	280	300	400	500	600	800	1000
KLM 50-300 M	H (m)	2,84	2,8	2,8	2,7	2,6	2,4	2,2	2	1,5	1							
KLM 50-300 T		3	3	2,9	2,9	2,8	2,6	2,5	2,3	1,8	1,2	0,5						
KLM 50-600 M		5,4	5,3	5,1	5	4,8	4,6	4,4	4,1	3,5	2,9	2,3	1,9					
KLM 50-600 T		5,8	5,8	5,7	5,6	5,5	5,4	5,2	5	4,5	4	3,2	2,8					
KLP 50-900 M		9,3	9,3	9,3	9,2	9	8,9	8,7	8,5	8	7,5	6,8	6,3	3,8				
KLP 50-900 T		9,3	9,3	9,3	9,2	9	8,9	8,7	8,5	8	7,5	6,8	6,3	3,8				
KLP 50-1200 M		12,2	12,2	12,2	12,1	12	11,9	11,73	11,5	11	10,3	9,5	9,1	6,6	3,8			
KLP 50-1200 T		12,2	12,2	12,2	12,1	12	11,9	11,73	11,5	11	10,3	9,5	9,1	6,6	3,8			
KLP 50-1600 M		16,8	16,7	16,7	16,6	16,5	16,3	16,1	16	15,5	15	14,3	13,9	11,4	8,4	5,1		
KLP 50-1600 T		16,2	16	15,9	15,8	15,6	15,5	15,3	15,1	14,6	13,9	13	12,6	10	7,1	3,9		
KLP 50-2000 M		23,4	23,3	23,3	23,2	23,2	23,1	22,9	22,8	22,3	21,7	21	20,6	18,2	15,3	12		
KLP 50-2000 T		23,4	23,3	23,3	23,2	23,2	23,1	22,9	22,8	22,3	21,7	21	20,6	18,2	15,3	12		

MODEL	Q=m³h	0	2,4	3,6	4,8	6	7,2	8,4	9,6	12	14,4	16,8	18	24	30	36	48	60
	Q=l/min	0	40	60	80	100	120	140	160	200	240	280	300	400	500	600	800	1000
KLM 65-300 T	H (m)	3,1	3	3	3	3	2,9	2,9	2,8	2,5	2,2	1,7	1,5					
KLM 65-600 T		5,1	5,1	5,1	5,1	5	5	4,9	4,8	4,5	4,2	3,8	3,6	2,1				
KLP 65-900 T		9,3	9,4	9,4	9,4	9,4	9,4	9,4	9,3	9,2	9,1	8,9	8,7	7,7	6	3,6		
KLP 65-1200 T		12,3	12,3	12,3	12,3	12,3	12,2	12,2	12,2	12,2	12,1	12	12	11	9,2	6,8		
KLP 65-1600 T		17,2	17,2	17,2	17,2	17,2	17,2	17,2	17,2	17,2	17,2	17	16,9	15,8	14,1	11,9	6,3	
KLP 65-2000 T		20,6	20,7	20,7	20,7	20,7	20,7	20,6	20,6	20,5	20,3	20	19,8	18,8	17,2	15,1	9,7	

MODEL	Q=m³h	0	2,4	3,6	4,8	6	7,2	8,4	9,6	12	14,4	16,8	18	24	30	36	48	60	72	84
	Q=l/min	0	40	60	80	100	120	140	160	200	240	280	300	400	500	600	800	1000	1200	1400
KLM 80-300 T	H (m)	3,1	3,1	3,1	3,1	3,1	3,1	3,1	3,1	3,1	3	3	3	2,5	2	1,1				
KLM 80-600 T		5,6	5,7	5,7	5,8	5,8	5,8	5,8	5,8	5,8	5,8	5,7	5,7	5,4	5	4,3	2,4			
KLP 80-900 T		8,8	8,8	8,8	8,8	8,8	8,8	8,8	8,7	8,7	8,7	8,6	8,6	8,4	8	7,5	6	3,6		
KLP 80-1200 T		11,8	11,7	11,7	11,7	11,7	11,7	11,7	11,7	11,6	11,6	11,6	11,6	11,5	11,3	11	9,8	7,4	4,2	
KLP 80-1600 T		16,2	16,2	16,2	16,3	16,3	16,3	16,3	16,3	16,3	16,3	16,3	16,3	16,2	16	15,5	14	11,5	8,7	5,3
KLP 80-2000 T		20,8	20,9	20,9	21	21	21	21	21	21,1	21,1	21,1	21,1	21,1	21	20,6	19,3	17,4	14,8	11,7

DAB PUMPS reserves the right to make modifications without notice.

KLM / KLP / DKLM / DKLP

IN-LINE PUMPS

SELECTION TABLE - DKLM / DKLP

MODEL	Q=m³h	0	2,4	3,6	4,8	6	7,2	8,4	9,6	12	14,4	16,8	18	24	30	36	48	60
	Q=l/min	0	40	60	80	100	120	140	160	200	240	280	300	400	500	600	800	1000
DKLM 40-300 M	H (m)	3,6	3,4	3,2	2,9	2,6	2,1	1,6	1									
DKLM 40-300 T		3,6	3,4	3,2	2,9	2,6	2,1	1,6	1									
DKLP 40-600 M		8,3	8	7,8	7,5	7,1	6,6	6	5,4	3,9	1,9							
DKLP 40-600 T		8,3	8	7,8	7,5	7,1	6,6	6	5,4	3,9	1,9							
DKLP 40-900 M		10,6	10,5	10,2	10	9,7	9,2	8,7	8	6,4	4,5	2,5						
DKLP 40-900 T		10,6	10,5	10,2	10	9,7	9,2	8,7	8	6,4	4,5	2,5						
DKLP 40-1200 M		14,3	13,9	13,6	13,2	12,8	12,3	11,8	11,1	9,4	7,5	5,3	4,1					
DKLP 40-1200 T		14,3	13,9	13,6	13,2	12,8	12,3	11,8	11,1	9,4	7,5	5,3	4,1					
DKLP 40-1600 M		16,5	16,2	16	15,6	15,2	14,7	14,1	13,5	11,9	9,8	7,5	6,1					
DKLP 40-1600 T		16,5	16,2	16	15,6	15,2	14,7	14,1	13,5	11,9	9,8	7,5	6,1					
DKLP 40-1800 M		19,1	18,6	18,2	17,8	17,3	16,7	16,1	15,4	13,6	11,5	9,1	7,7					
DKLP 40-1800 T		19,1	18,6	18,2	17,8	17,3	16,7	16,1	15,4	13,6	11,5	9,1	7,7					

MODEL	Q=m³h	0	2,4	3,6	4,8	6	7,2	8,4	9,6	12	14,4	16,8	18	24	30	36	48	60
	Q=l/min	0	40	60	80	100	120	140	160	200	240	280	300	400	500	600	800	1000
DKLM 50-300 M	H (m)	3	2,9	2,8	2,6	2,5	2,3	2	1,8	1,2	0,5							
DKLM 50-300 T		3	2,9	2,8	2,6	2,5	2,3	2	1,8	1,2	0,5							
DKLM 50-600 M		5,7	5,5	5,4	5,3	5,1	4,9	4,6	4,2	3,6	2,9	2	1,6					
DKLM 50-600 T		5,7	5,5	5,4	5,3	5,1	4,9	4,6	4,2	3,6	2,9	2	1,6					
DKLP 50-900 M		9,5	9,3	9,2	9	8,8	8,6	8,3	8	7,4	6,6	5,7	5,2	2,4				
DKLP 50-900 T		9,5	9,3	9,2	9	8,8	8,6	8,3	8	7,4	6,6	5,7	5,2	2,4				
DKLP 50-1200 M		12,3	12	11,9	11,7	11,5	11,3	11	10,8	10,1	9,3	8,4	7,9	5				
DKLP 50-1200 T		12,3	12	11,9	11,7	11,5	11,3	11	10,8	10,1	9,3	8,4	7,9	5				
DKLP 50-1600 M		16,1	15,8	16,5	15,3	15	14,8	14,5	14,1	13,3	12,4	11,4	10,8	7,6	3,6			
DKLP 50-1600 T		16,1	15,8	16,5	15,3	15	14,8	14,5	14,1	13,3	12,4	11,4	10,8	7,6	3,6			
DKLP 50-2000 M		23,2	23	22,8	22,6	22,3	22	21,6	21,3	20,4	19,5	18,5	17,9	14,8	11,2	7		
DKLP 50-2000 T		23,2	23	22,8	22,6	22,3	22	21,6	21,3	20,4	19,5	18,5	17,9	14,8	11,2	7		

MODEL	Q=m³h	0	2,4	3,6	4,8	6	7,2	8,4	9,6	12	14,4	16,8	18	24	30	36	48	60	72	84
	Q=l/min	0	40	60	80	100	120	140	160	200	240	280	300	400	500	600	800	1000	1200	1400
DKLM 65-300 T	H (m)	3,2	3,1	3,1	3,1	3,1	3	3	2,9	2,6	2,3	2	1,7							
DKLM 65-600 T		5,1	5,1	5,1	5	5	4,8	4,7	4,5	4,2	3,8	3,3	3,1	1,7						
DKLP 65-900 T		9,5	9,5	9,5	9,5	9,4	9,4	9,3	9,2	9,1	8,9	8,6	8,4	7,3	5,6	3,5				
DKLP 65-1200 T		12,4	12,3	12,3	12,2	12,1	12,1	12	12	11,9	11,7	11,5	11,4	10,2	8,3	6				
DKLP 65-1600 T		17	16,9	16,9	16,9	16,8	16,7	16,6	16,6	16,4	16,2	16	15,8	14,6	12,7	10,4	5,1			
DKLP 65-2000 T		20,4	20,2	20,1	20	20	20	19,9	19,8	19,7	19,4	19,1	19	17,5	15,5	13	7,8			

MODEL	Q=m³h	0	2,4	3,6	4,8	6	7,2	8,4	9,6	12	14,4	16,8	18	24	30	36	48	60	72	84	96	108
	Q=l/min	0	40	60	80	100	120	140	160	200	240	280	300	400	500	600	800	1000	1200	1400	1600	1800
DKLM 80-300 T	H (m)	3,5	3,5	3,4	3,4	3,4	3,3	3,3	3,2	3,1	3	2,8	2,7	2,2	1,5							
DKLM 80-600 T		5,6	5,6	5,6	5,6	5,6	5,6	5,5	5,5	5,4	5,3	5,2	5	4,6	3,9	3,1						
DKLP 80-900 T		8,9	8,8	8,8	8,7	8,7	8,6	8,5	8,5	8,3	8,2	8	7,9	7,3	6,6	5,7	3,4					
DKLP 80-1200 T		11,9	11,8	11,8	11,8	11,7	11,7	11,6	11,6	11,5	11,3	11,2	11,1	10,5	9,7	8,8	4,5	3,9				
DKLP 80-1600 T		16,3	16,2	16,2	16,1	16	16	15,9	15,8	15,6	15,5	15,3	15,2	14,9	14,4	13,7	11,6	8,7	5,1			
DKLP 80-2000 T		20,3	20,3	20,3	20,3	20,3	20,3	20,3	20,3	20,3	20,2	20,2	20,1	19,9	19,4	18,8	16,8	13,9	10,4			

DAB PUMPS reserves the right to make modifications without notice.

KLM / KLP 40 - IN-LINE PUMPS

Pumped liquid temperature range: from -15 °C to +120 °C - Maximum ambient temperature: +40 °C

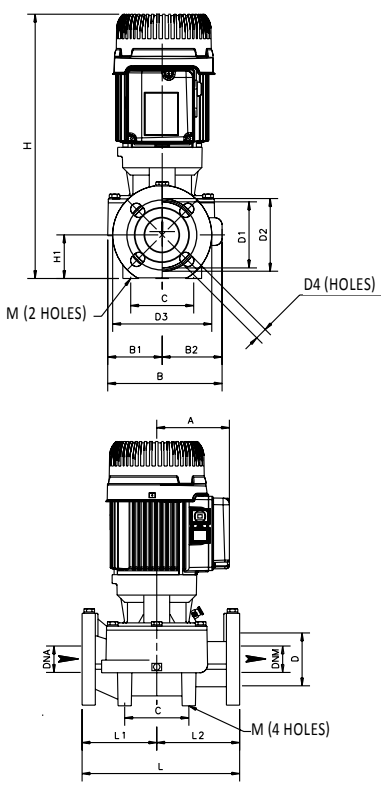

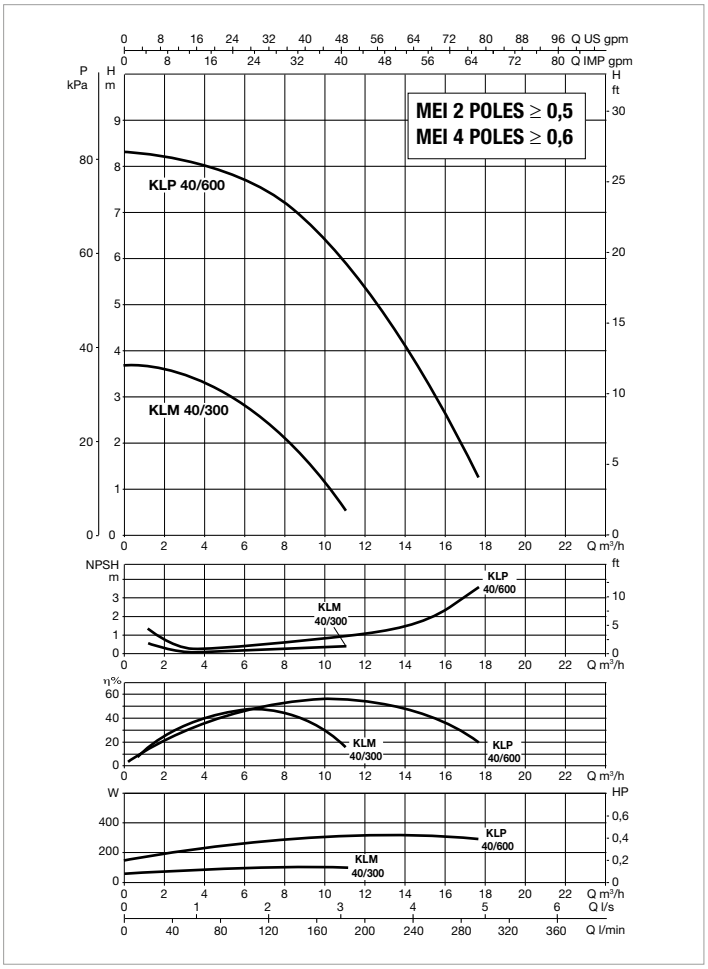

The performance curves are based on kinematic viscosity values = 1 mm²/s and density equal to 1000 kg/m³. Curve tolerance according to ISO 9906.

MODEL	CENTRE DISTANCE	PUMP CONNECTIONS	ELECTRICAL DATA								
			POWER INPUT 50 Hz	POLES	n r.p.m.	P1 MAX kW	P2 NOMINAL		In A	CAPACITOR	
							kW	HP		µF	Vc
KLM 40-300 M	250	DN 40	1 x 220 - 240 V ~	4	1420	0,2	0,1	0,14	1,12	8	450
KLM 40-300 T	250	DN 40	3 x 230 - 400 V ~	4	1466	0,16	0,1	0,14	1,04-0,6	-	-
KLP 40-600 M	250	DN 40	1 x 220 - 240 V ~	2	2937	0,6	0,3	0,41	3,29	20	450
KLP 40-600 T	250	DN 40	3 x 230 - 400 V ~	2	2898	0,49	0,3	0,41	2,13-1,23	-	-

MODEL	A	B	B1	B2	C	DNA	DNM	D	D1	D2	D3	D4	H	H1	L	L1	L2	M	PACKING DIMENSIONS			VOLUME (m³)	WEIGHT Kg
																			L/A	L/B	H		
KLM 40/300 M	110	179	82	97	100	40	40	80	100	110	150	4 HOLES 18x23	396	66	250	125	125	2 HOLES 10	470	280	330	0,043	21,1
KLM 40/300 T	110	179	82	97	100	40	40	80	100	110	150		396	66	250	125	125		470	280	330	0,043	20,1
KLP 40/600 M-T	110	179	82	97	100	40	40	80	100	110	150		396	66	250	125	125		470	280	330	0,043	22,5

DAB PUMPS reserves the right to make modifications without notice.

KLM / KLP 40 - IN-LINE PUMPS

Pumped liquid temperature range: from -15 °C to +120 °C - Maximum ambient temperature: +40 °C

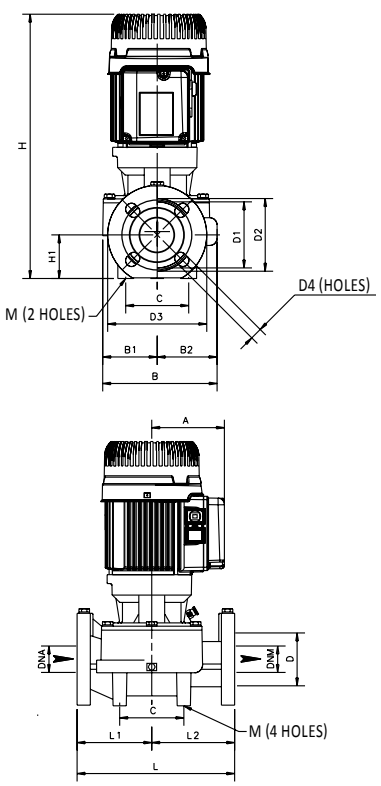

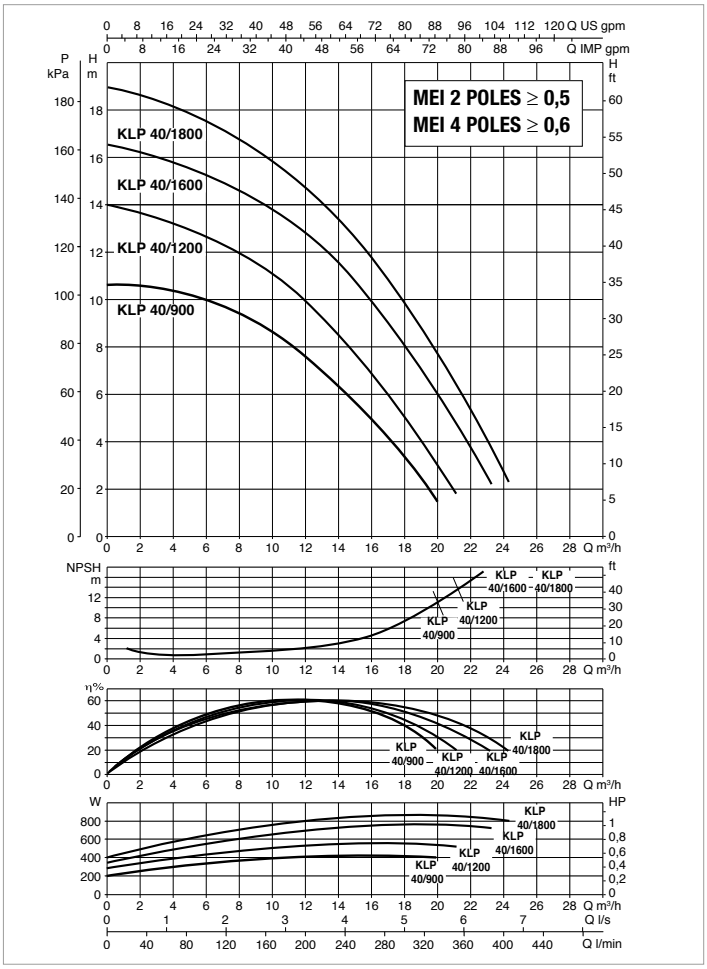

The performance curves are based on kinematic viscosity values = 1 mm²/s and density equal to 1000 kg/m³. Curve tolerance according to ISO 9906.

MODEL	CENTRE DISTANCE	PUMP CONNECTIONS	ELECTRICAL DATA									
			POWER INPUT 50 Hz	POLES	MOTOR TYPE	n r.p.m.	P1 MAX kW	P2 NOMINAL		In A	CAPACITOR	
								kW	HP		µF	Vc
KLP 40-900 M	250	DN 40	1 x 220 - 240 V ~	2	-	2913	0,73	0,41	0,56	3,75	20	450
KLP 40-900 T	250	DN 40	3 x 230 - 400 V ~	2	-	2851	0,63	0,41	0,56	2,37-1,37	-	-
KLP 40-1200 M	250	DN 40	1 x 220 - 240 V ~	2	-	2873	0,91	0,54	0,73	4,4	20	450
KLP 40-1200 T	250	DN 40	3 x 230 - 400 V ~	2	-	2776	0,82	0,54	0,73	2,70-1,56	-	-
KLP 40-1600 M	250	DN 40	1 x 220 - 240 V ~	2	-	2812	1,05	0,75	1,01	4,71	20	450
KLP 40-1600 T	250	DN 40	3 x 230 - 400 V ~	2	IE3	2840	0,96	0,75	1,01	3,44-1,91	-	-
KLP 40-1800 M	250	DN 40	1 x 220 - 240 V ~	2	-	2812	1,18	0,85	1,16	5,44	20	450
KLP 40-1800 T	250	DN 40	3 x 230 - 400 V ~	2	IE3	2841	1,09	0,85	1,15	3,29-1,88	-	-

MODEL	A	B	B1	B2	C	DNA	DNM	D	D1	D2	D3	D4	H	H1	L	L1	L2	M	PACKING DIMENSIONS			VOLUME (m^3)	WEIGHT Kg
																			L/A	L/B	H		
KLP 40-900 M-T	110	179	82	97	100	40	40	80	100	110	150	4 HOLES 18x23	396	66	250	125	125	2 HOLES 10	470	280	330	0,043	22,5
KLP 40-1200 M-T	110	179	82	97	100	40	40	80	100	110	150		396	66	250	125	125		470	280	330	0,043	23,2
KLP 40-1600 M-T	110	179	82	97	100	40	40	80	100	110	150		396	66	250	125	125		470	280	330	0,043	23,5
KLP 40-1800 M-T	110	179	82	97	100	40	40	80	100	110	150		396	66	250	125	125		470	280	330	0,043	24,5

KLM / KLP 50 - IN-LINE PUMPS

Pumped liquid temperature range: from -15 °C to +120 °C - Maximum ambient temperature: +40 °C

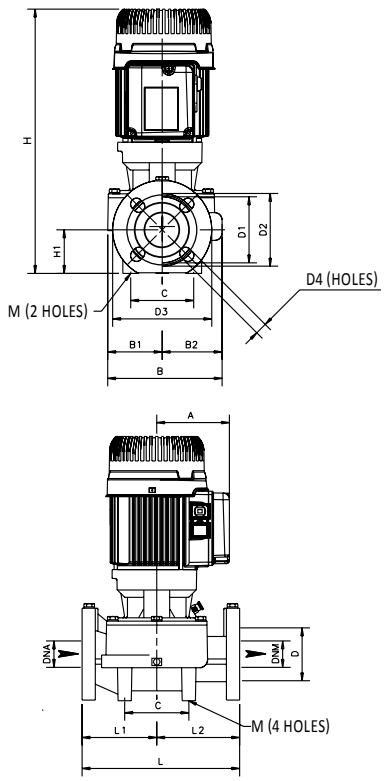

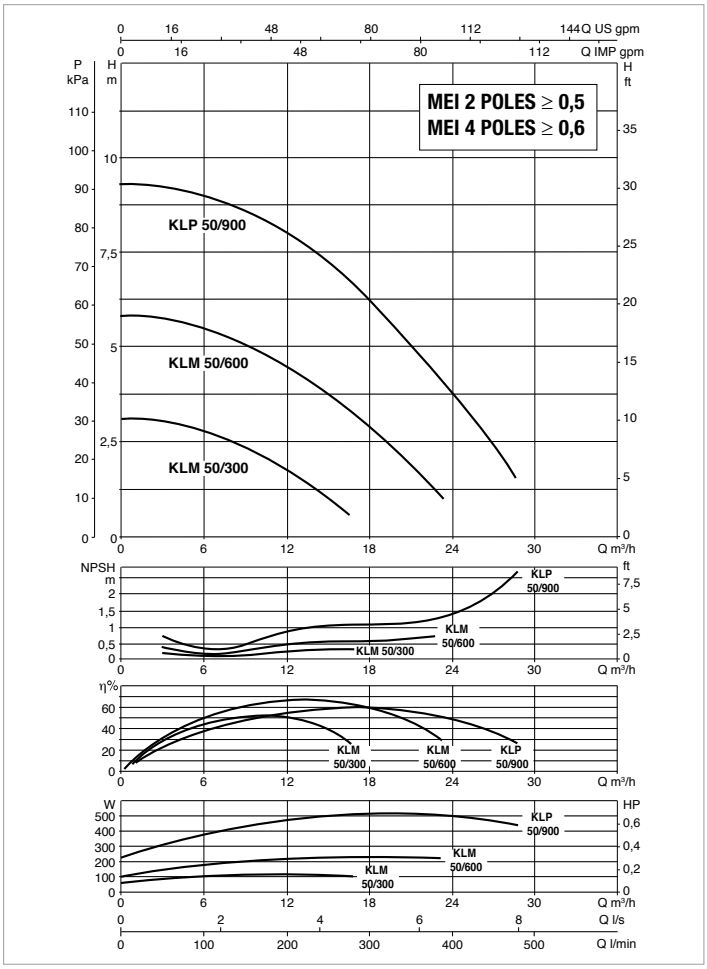

The performance curves are based on kinematic viscosity values = 1 mm²/s and density equal to 1000 kg/m³. Curve tolerance according to ISO 9906.

MODEL	CENTRE DISTANCE	PUMP CONNECTIONS	ELECTRICAL DATA									
			POWER INPUT 50Hz	POLES	MOTOR TYPE	n r.p.m.	P1 MAX kW	P2 NOMINAL		In A	CAPACITOR	
								kW	HP		µF	Vc
KLM 50-300 M	280	DN 50	1 x 220 - 240 V ~	4	-	1410	0,21	0,11	0,15	1,1	8	450
KLM 50-300 T	280	DN 50	3 x 230 - 400 V ~	4	-	1463	0,17	0,11	0,15	1,02-0,59	-	-
KLM 50-600 M	280	DN 50	1 x 220 - 240 V ~	4	-	1275	0,34	0,22	0,3	1,55	8	450
KLM 50-600 T	280	DN 50	3 x 230 - 400 V ~	4	-	1399	0,34	0,22	0,3	1,28-0,74	-	-
KLP 50-900 M	280	DN 50	1 x 220 - 240 V ~	2	-	2898	0,8	0,51	0,69	4,02	20	450
KLP 50-900 T	280	DN 50	3 x 230 - 400 V ~	2	IE3	2897	0,67	0,51	0,69	3,39-1,96	-	-

MODEL	A	B	B1	B2	C	DNA	DNM	D	D1	D2	D3	D4	H	H1	L	L1	L2	M	PACKING DIMENSIONS			VOLUME (m³)	WEIGHT Kg
																			L/A	L/B	H		
KLM 50-300 M-T	110	204	94	110	100	50	50	90	110	125	165	4 HOLES 18x25,5	414	73	280	140	170	2 HOLES 10	470	280	330	0,043	24,2
KLM 50-600 M-T	110	204	94	110	100	50	50	90	110	125	165		414	73	280	140	170		470	280	330	0,043	24,6
KLP 50-900 M-T	110	204	94	110	100	50	50	90	110	125	165		414	73	280	140	170		470	280	330	0,043	26,5

KLM / KLP 50 - IN-LINE PUMPS

Pumped liquid temperature range: from -15 °C to +120 °C - Maximum ambient temperature: +40 °C

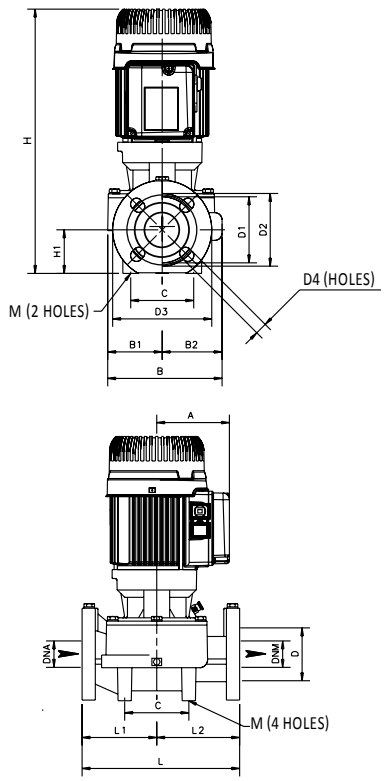

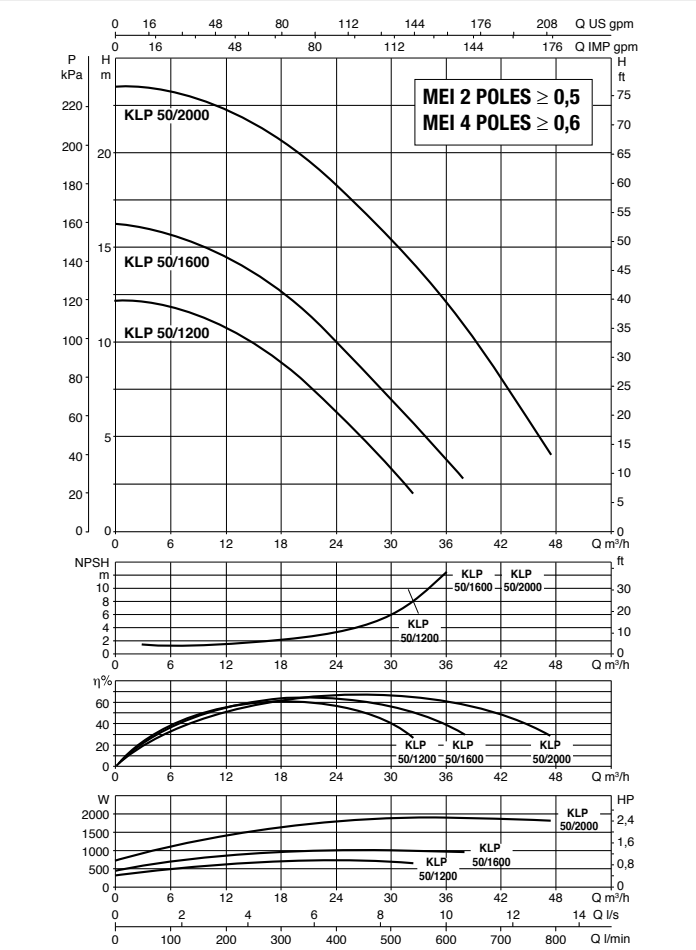

The performance curves are based on kinematic viscosity values = 1 mm²/s and density equal to 1000 kg/m³. Curve tolerance according to ISO 9906.

MODEL	CENTRE DISTANCE	PUMP CONNECTIONS	ELECTRICAL DATA									
			POWER INPUT 50 Hz	POLES	MOTOR TYPE	n r.p.m.	P1 MAX kW	P2 NOMINAL		In A	CAPACITOR	
								kW	HP		µF	Vc
KLP 50-1200 M	280	DN 50	1 x 220 - 240 V ~	2	-	2840	1,04	0,72	0,98	4,93	20	450
KLP 50-1200 T	280	DN 50	3 x 230 - 400 V ~	2	IE3	2842	0,92	0,72	0,97	3,72-2,15	-	-
KLP 50-1600 M	280	DN 50	1 x 220 - 240 V ~	2	-	2844	1,56	1,01	1,37	7,15	40	450
KLP 50-1600 T	280	DN 50	3 x 230 - 400 V ~	2	IE3	2746	1,32	1,01	1,38	4,05-2,32	-	-
KLP 50-2000 M	280	DN 50	1 x 220 - 240 V ~	2	-	2754	2,43	1,83	2,49	11,06	40	450
KLP 50-2000 T	280	DN 50	3 x 230 - 400 V ~	2	IE3	2832	2,34	1,83	2,49	6,77-3,9	-	-

MODEL	A	B	B1	B2	C	DNA	DNM	D	D1	D2	D3	D4	H	H1	L	L1	L2	M	PACKING DIMENSIONS			VOLUME (m³)	WEIGHT Kg
																			L/A	L/B	H		
KLP 50-1200 M-T	110	204	94	110	100	50	50	90	110	125	165	4 HOLES 18x25,5	414	73	280	140	170	2 HOLES 10	470	280	330	0,043	26,6
KLP 50-1600 M-T	110	204	94	110	100	50	50	90	110	125	165		414	73	280	140	170		470	280	330	0,043	26,7
KLP 50-2000 M-T	115	204	94	110	100	50	50	90	110	125	165		423	73	280	140	170		510	310	470	0,074	33

KLM / KLP 65 - IN-LINE PUMPS

Pumped liquid temperature range: from -15 °C to +120 °C - Maximum ambient temperature: +40 °C

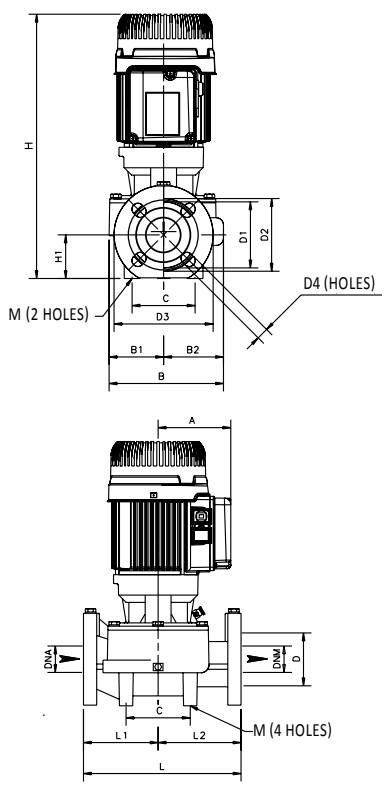

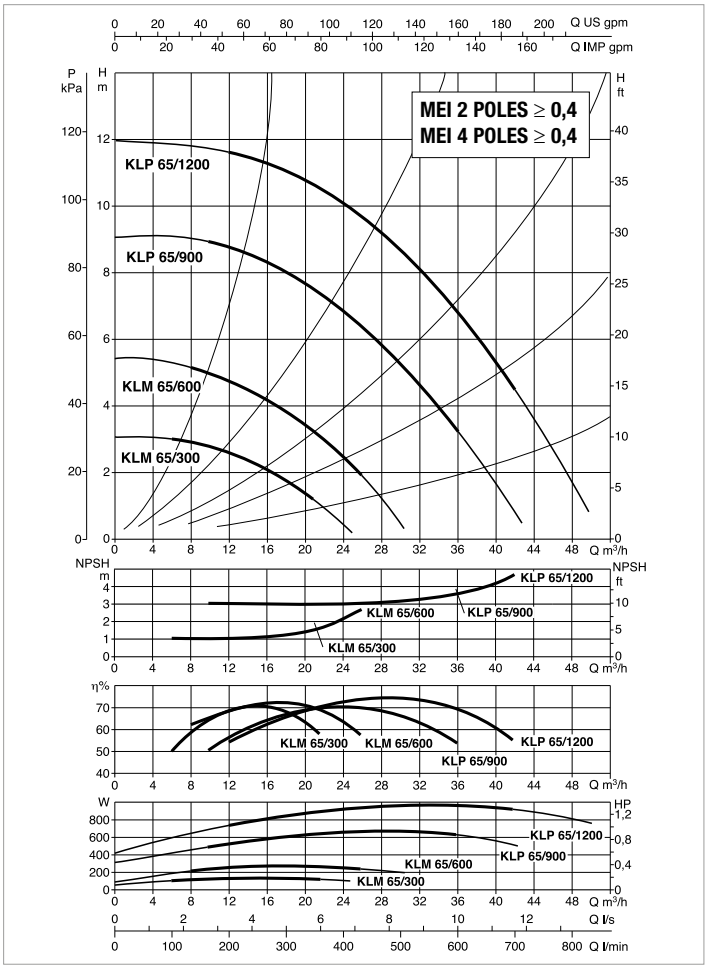

The performance curves are based on kinematic viscosity values = 1 mm²/s and density equal to 1000 kg/m³. Curve tolerance according to ISO 9906.

MODEL	CENTRE DISTANCE	PUMP CONNECTIONS	ELECTRICAL DATA							
			POWER INPUT 50 Hz	POLES	MOTOR TYPE	n r.p.m.	P1 MAX kW	P2 NOMINAL		In A
								kW	HP	
KLM 65-300 T	340	DN 65	3 x 230 - 400 V ~	4	-	1445	0,22	0,15	0,2	1,07-0,62
KLM 65-600 T	340	DN 65	3 x 230 - 400 V ~	4	-	1391	0,36	0,24	0,33	1,30-0,75
KLP 65-900 T	340	DN 65	3 x 230 - 400 V ~	2	IE3	2937	0,99	0,8	1,09	5,05-2,92

MODEL	A	B	B1	B2	C	DNA	DNM	D	D1	D2	D3	D4	H	H1	L	L1	L2	M	PACKING DIMENSIONS			VOLUME (m³)	WEIGHT Kg
																			L/A	L/B	H		
KLM 65-300 T	110	228	99	129	100	65	65	110	130	145	185	4 HOLES 18x25,5	433	82	340	170	170	2 HOLES 12	510	310	470	0,074	29,3
KLM 65-600 T	110	228	99	129	100	65	65	110	130	145	185		433	82	340	170	170		510	310	470	0,074	29,5
KLP 65-900 T	114	228	99	129	100	65	65	110	130	145	185		433	82	340	170	170		510	310	470	0,074	35

DAB PUMPS reserves the right to make modifications without notice.

KLM / KLP 65 - IN-LINE PUMPS

Pumped liquid temperature range: from -15 °C to +120 °C - Maximum ambient temperature: +40 °C

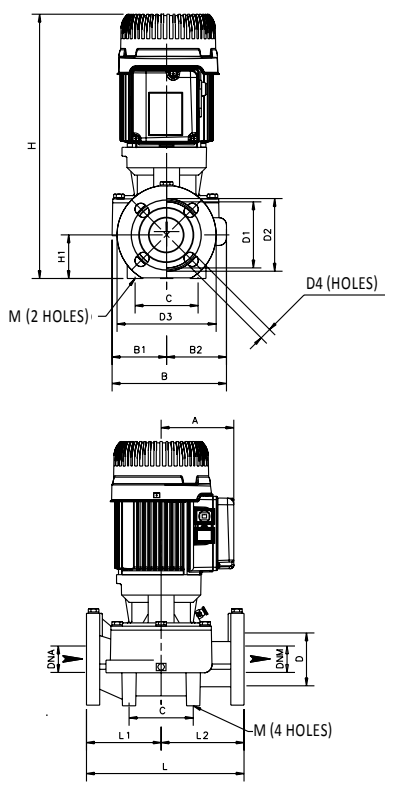

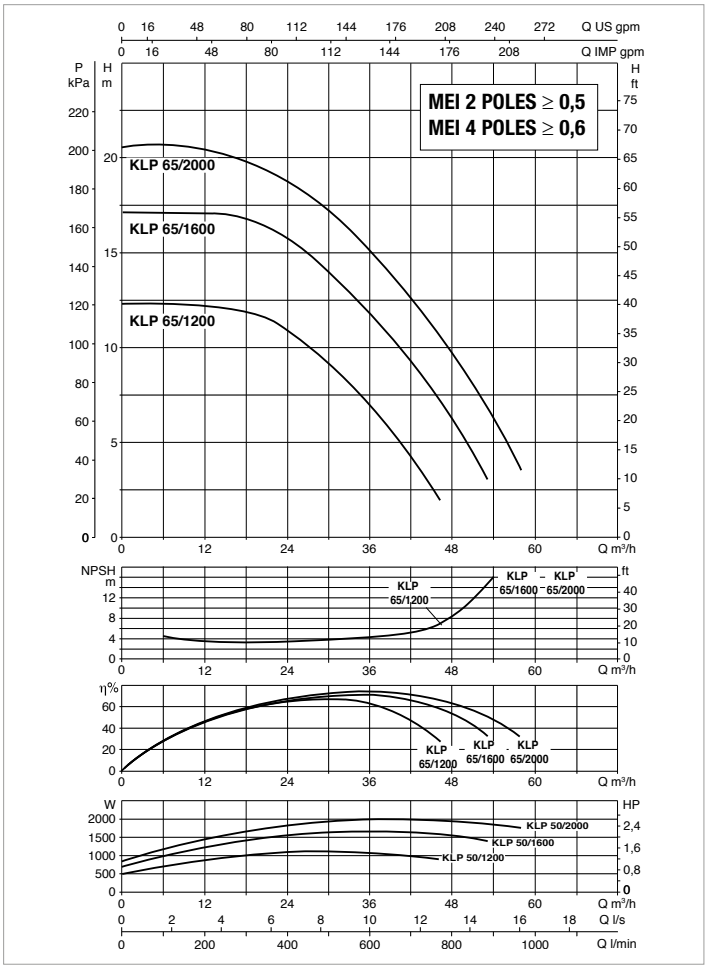

The performance curves are based on kinematic viscosity values = 1 mm²/s and density equal to 1000 kg/m³. Curve tolerance according to ISO 9906.

MODEL	CENTRE DISTANCE	PUMP CONNECTIONS	ELECTRICAL DATA							
			POWER INPUT 50 Hz	POLES	MOTOR TYPE	n r.p.m.	P1 MAX kW	P2 NOMINAL		In A
								kW	HP	
KLP 65-1200 T	340	DN 65	3 x 230 - 400 V ~	2	IE3	2910	1,34	1,12	1,52	5,64-3,26
KLP 65-1600 T	340	DN 65	3 x 230 - 400 V ~	2	IE3	2863	1,99	1,65	2,25	6,49-3,75
KLP 65-2000 T	340	DN 65	3 x 230 - 400 V ~	2	IE3	2828	2,51	2	2,72	7,7-4,5

MODEL	A	B	B1	B2	C	DNA	DNM	D	D1	D2	D3	D4	H	H1	L	L1	L2	M	PACKING DIMENSIONS			VOLUME (m³)	WEIGHT Kg
																			L/A	L/B	H		
KLP 65-1200 T	114	228	99	129	100	65	65	110	130	145	185	4 HOLES 18x25,5	433	82	340	170	170	2 HOLES 10	510	310	470	0,074	35,1
KLP 65-1600 T	114	228	99	129	100	65	65	110	130	145	185		433	82	340	170	170		510	310	470	0,074	35,2
KLP 65-2000 T	118	228	99	129	100	65	65	110	130	145	185		517	82	340	170	170		520	290	700	0,104	38,2

KLM / KLP 80 - IN-LINE PUMPS

Pumped liquid temperature range: from -15 °C to +120 °C - Maximum ambient temperature: +40 °C

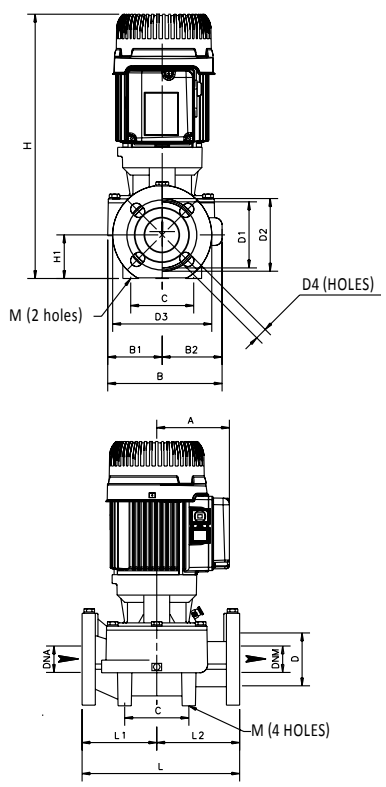

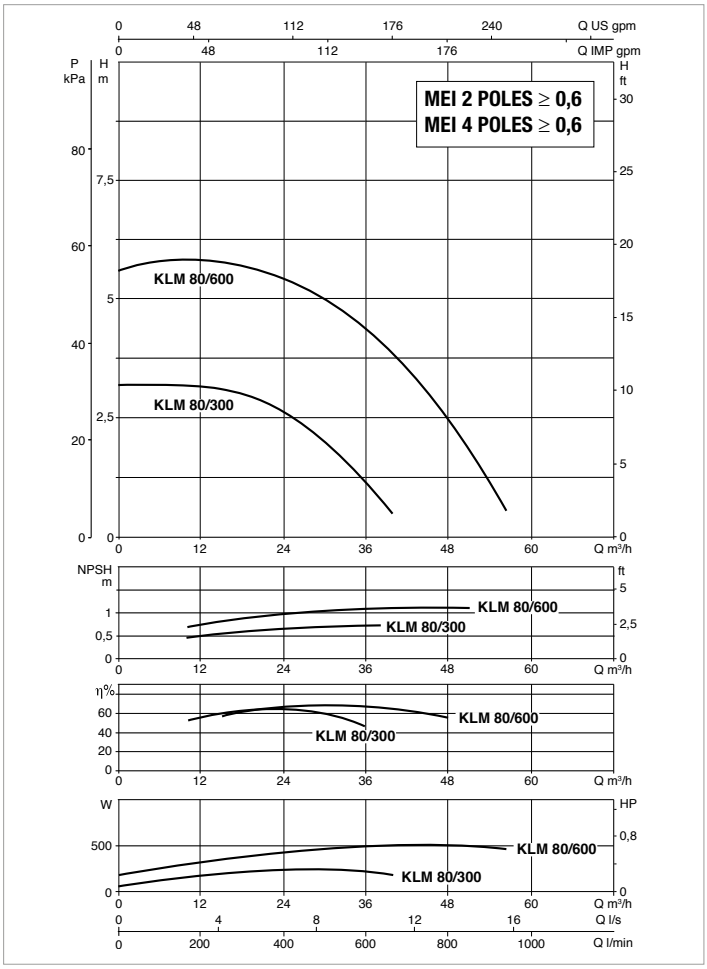

The performance curves are based on kinematic viscosity values = 1 mm²/s and density equal to 1000 kg/m³. Curve tolerance according to ISO 9906.

MODEL	CENTRE DISTANCE	PUMP CONNECTIONS	ELECTRICAL DATA							
			POWER INPUT 50 Hz	POLES	MOTOR TYPE	n r.p.m.	P1 MAX kW	P2 NOMINAL		In A
								kW	HP	
KLM 80-300 T	360	DN 80	3 x 230 - 400 V ~	4	-	1460	0,36	0,25	0,33	1,2-0,7
KLM 80-600 T	360	DN 80	3 x 230 - 400 V ~	4	IE3	1400	0,75	0,75	1	2,8-1,6

MODEL	A	B	B1	B2	C	DNA	DNM	D	D1	D2	D3	D4	H	H1	L	L1	L2	M	PACKING DIMENSIONS			VOLUME (m^3)	WEIGHT Kg
																			L/A	L/B	H		
KLM 80-300 T	110	229	99	130	115	80	80	128	150	160	200	4 HOLES 18x23	453	97	360	190	170	2 HOLES 12	510	310	470	0,074	32,5
KLM 80-600 T	110	229	99	130	115	80	80	128	150	160	200		453	97	360	190	170		510	310	470	0,074	36,7

DAB PUMPS reserves the right to make modifications without notice.

KLM / KLP 80 - IN-LINE PUMPS

Pumped liquid temperature range: from -15 °C to +120 °C - Maximum ambient temperature: +40 °C

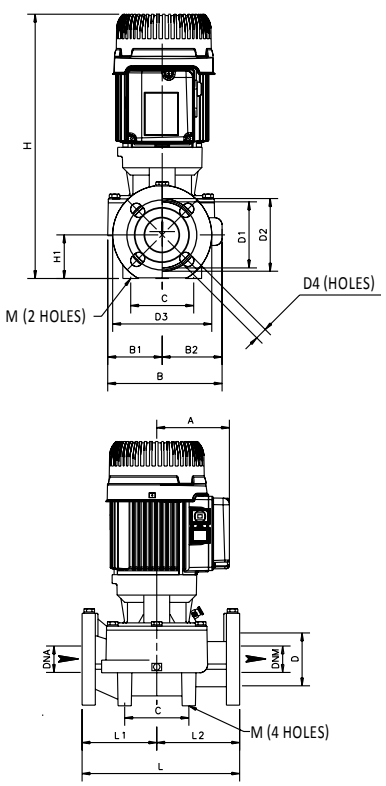

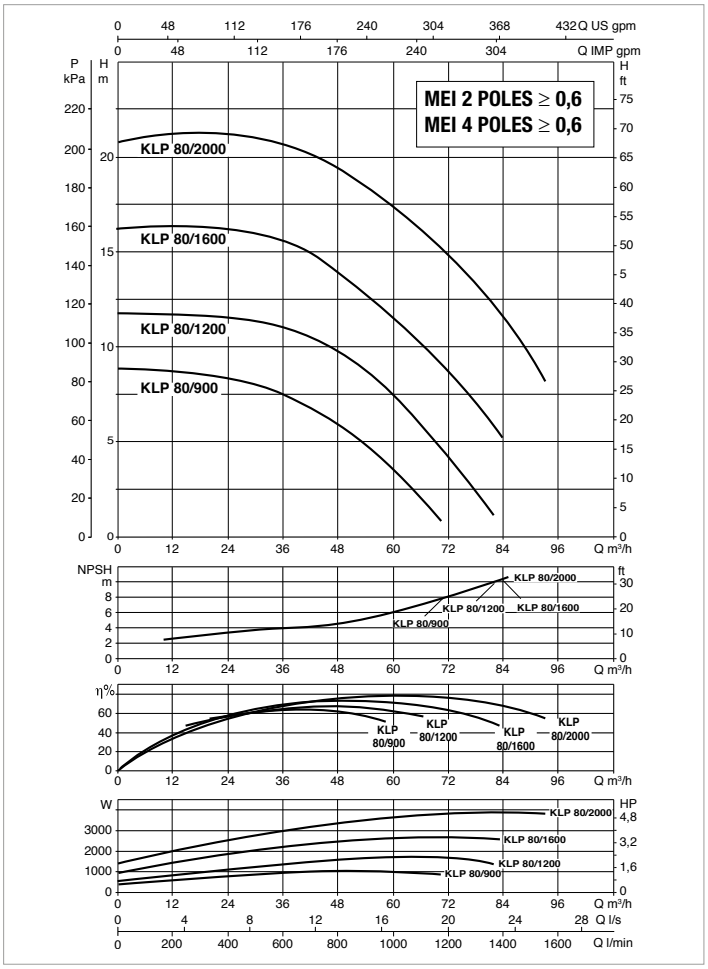

The performance curves are based on kinematic viscosity values = 1 mm²/s and density equal to 1000 kg/m³. Curve tolerance according to ISO 9906.

MODEL	CENTRE DISTANCE	PUMP CONNECTIONS	ELECTRICAL DATA							
			POWER INPUT 50 Hz	POLES	MOTOR TYPE	n r.p.m.	P1 MAX kW	P2 NOMINAL		In A
								kW	HP	
KLP 80-900 T	360	DN 80	3 x 230 - 400 V ~	2	IE3	2920	1,4	1,84	2,5	5,2-3,51
KLP 80-1200 T	360	DN 80	3 x 230 - 400 V ~	2	IE3	2840	2,1	1,84	2,5	6,6-4,31
KLP 80-1600 T	360	DN 80	3 x 230 - 400 V ~	2	IE3	2796	3,2	2,55	3,5	10,28-5,94
KLP 80-2000 T	360	DN 80	3 x 230 - 400 V ~	2	IE3	2868	4,72	3,67	5	14,9-8,42

MODEL	A	B	B1	B2	C	DNA	DNM	D	D1	D2	D3	D4	H	H1	L	L1	L2	M	PACKING DIMENSIONS			VOLUME (m^3)	WEIGHT Kg
																			L/A	L/B	H		
KLP 80-900 T	118	229	99	130	115	80	80	128	150	160	200	4 HOLES 18x23	537	97	360	190	170	2 HOLES 12	520	290	700	0,104	40
KLP 80-1200 T	118	229	99	130	115	80	80	128	150	160	200		537	97	360	190	170		520	290	700	0,104	41
KLP 80-1600 T	118	229	99	130	115	80	80	128	150	160	200		537	97	360	190	170		520	290	700	0,104	42
KLP 80-2000 T	135	229	99	130	115	80	80	128	150	160	200		526	97	360	190	170		520	290	700	0,104	48

DKLM / DKLP40 - IN-LINE PUMPS

Pumped liquid temperature range: from -15 °C to +120 °C - Maximum ambient temperature: +40 °C

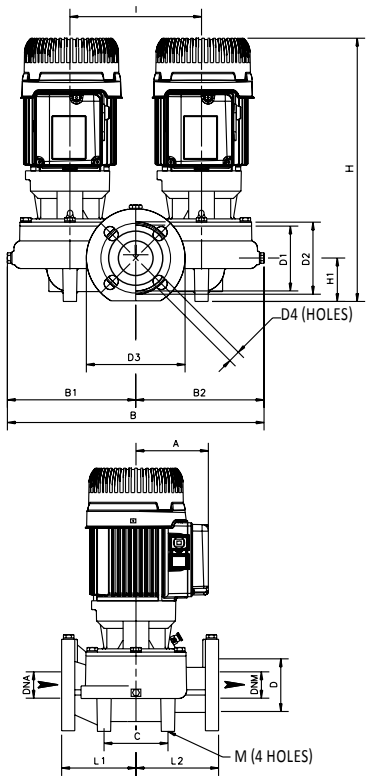

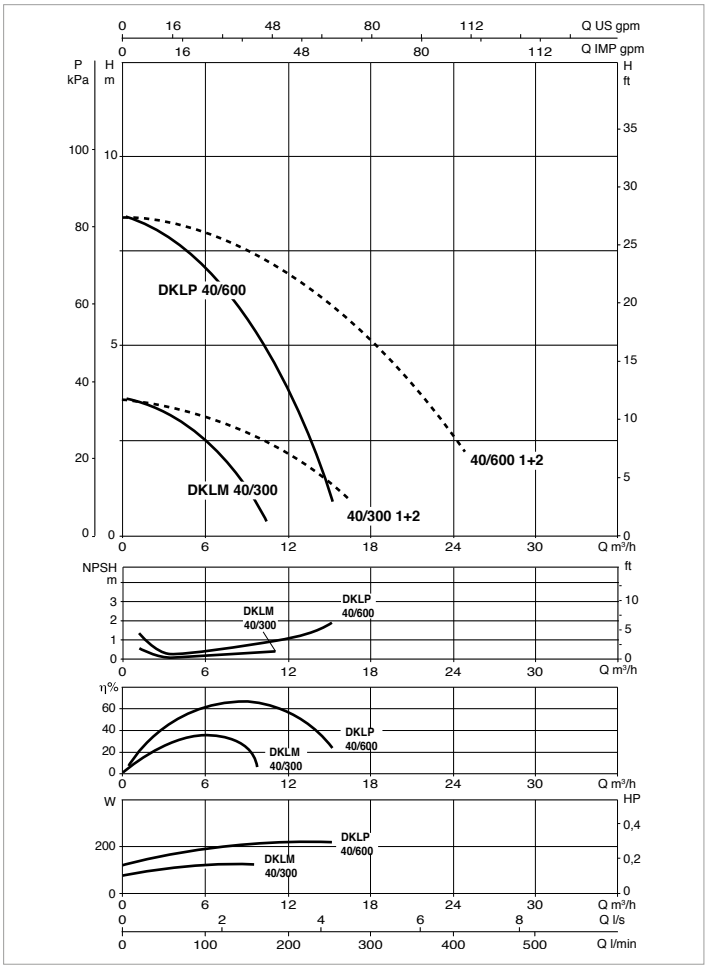

The performance curves are based on kinematic viscosity values = 1 mm²/s and density equal to 1000 kg/m³. Curve tolerance according to ISO 9906.

For the MEI index refer to the hydraulic data of the individual pump.

MODEL	CENTRE DISTANCE	PUMP CONNECTIONS	ELECTRICAL DATA									
			POWER INPUT 50 Hz	POLES	MOTOR TYPE	n r.p.m.	P1 MAX kW	P2 NOMINAL		In A	CAPACITOR	
								kW	HP		µF	Vc
DKLM 40-300 M	250	DN 40	1 x 220 - 240 V ~	4	-	1420	0,19	0,1	0,14	1,12	8	450
DKLM 40-300 T	250	DN 40	3 x 230 - 400 V ~	4	-	1466	0,14	0,1	0,14	1,04-0,6	-	-
DKLP 40-600 M	250	DN 40	1 x 220 - 240 V ~	2	-	2937	0,58	0,3	0,41	3,29	20	450
DKLP 40-600 T	250	DN 40	3 x 230 - 400 V ~	2	-	2898	0,39	0,3	0,41	2,13-1,23	-	-

MODEL	A	B	B1	B2	C	DNA	DNM	D	D1	D2	D3	D4	H	H1	I	L	L1	L2	M	PACKING DIMENSIONS			VOLUME (m³)	WEIGHT Kg
																				L/A	L/B	H		
DKLM 40-300 M-T	110	437	217	220	100	40	40	80	100	110	150	4 HOLES 18x23	396	66	200	250	125	125	4 HOLES 10	530	280	470	0,07	38,2
DKLP 40-600 M-T	110	437	217	220	100	40	40	80	100	110	150		396	66	200	250	125	125		530	280	470	0,07	41,8

DKLM / DKLP40 - IN-LINE PUMPS

Pumped liquid temperature range: from -15 °C to +120 °C - Maximum ambient temperature: +40 °C

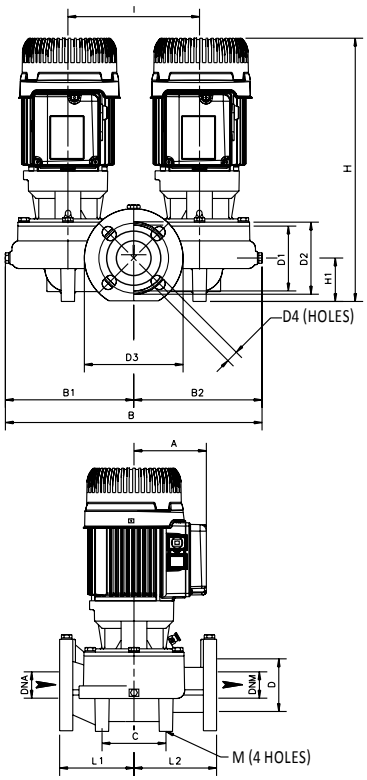

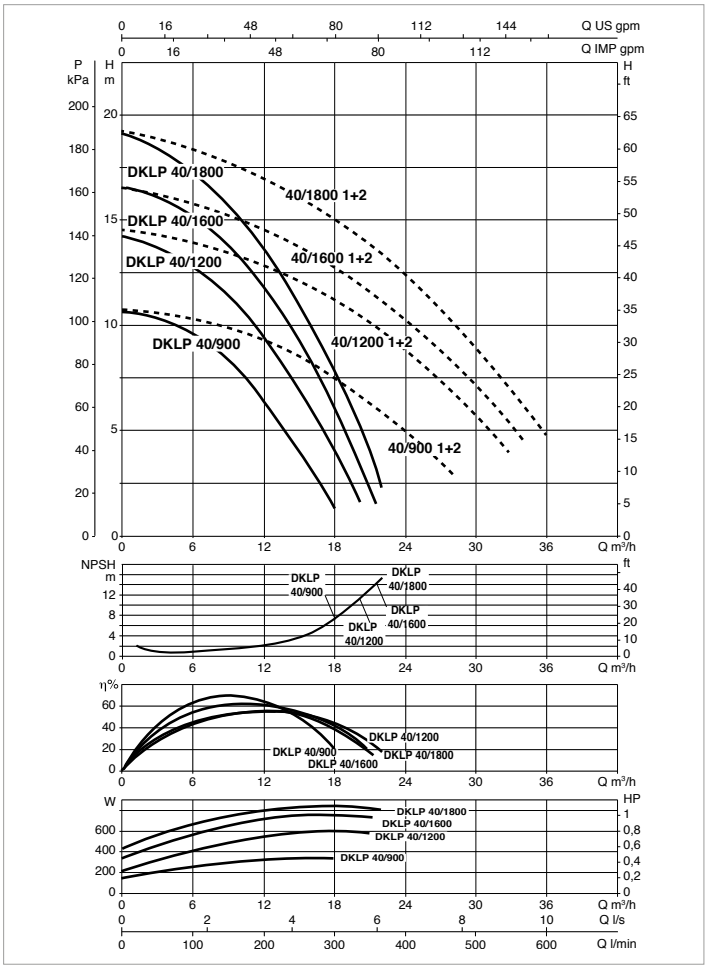

The performance curves are based on kinematic viscosity values = 1 mm²/s and density equal to 1000 kg/m³. Curve tolerance according to ISO 9906.

For the MEI index refer to the hydraulic data of the individual pump.

MODEL	CENTRE DISTANCE	PUMP CONNECTIONS	ELECTRICAL DATA									
			POWER INPUT 50 Hz	POLES	MOTOR TYPE	n r.p.m.	P1 MAX kW	P2 NOMINAL		In A	CAPACITOR	
								kW	HP		µF	Vc
DKLP 40-900 M	250	DN 40	1 x 220 - 240 V ~	2	-	2913	0,54	0,41	0,56	3,75	20	450
DKLP 40-900 T	250	DN 40	3 x 230 - 400 V ~	2	-	2851	0,45	0,41	0,56	2,37-1,37	-	-
DKLP 40-1200 M	250	DN 40	1 x 220 - 240 V ~	2	-	2873	0,7	0,54	0,73	4,4	20	450
DKLP 40-1200 T	250	DN 40	3 x 230 - 400 V ~	2	-	2776	0,87	0,54	0,73	2,70-1,56	-	-
DKLP 40-1600 M	250	DN 40	1 x 220 - 240 V ~	2	-	2812	1,18	0,75	1,01	4,71	20	450
DKLP 40-1600 T	250	DN 40	3 x 230 - 400 V ~	2	IE3	2840	1,04	0,75	1,01	3,44-1,91	-	-
DKLP 40-1800 M	250	DN 40	1 x 220 - 240 V ~	2	-	2812	1,15	0,85	1,16	5,44	20	450
DKLP 40-1800 T	250	DN 40	3 x 230 - 400 V ~	2	IE3	2841	1,03	0,85	1,15	3,29-1,88	-	-

MODEL	A	B	B1	B2	C	DNA	DNM	D	D1	D2	D3	D4	H	H1	I	L	L1	L2	M	PACKING DIMENSIONS			VOLUME (m³)	WEIGHT Kg
																				L/A	L/B	H		
DKLP 40-900 M-T	110	437	217	220	100	40	40	80	100	110	150	4 HOLES 18x23	396	66	200	250	125	125	4 HOLES 10	530	280	470	0,07	41,8
DKLP 40-1200 M-T	110	437	217	220	100	40	40	80	100	110	150		396	66	200	250	125	125		530	280	470	0,07	41,8
DKLP 40-1600 M-T	110	437	217	220	100	40	40	80	100	110	150		396	66	200	250	125	125		530	280	470	0,07	45,8
DKLP 40-1800 M-T	110	437	217	220	100	40	40	80	100	110	150		396	66	200	250	125	125		530	280	470	0,07	45,8

DKLM / DKLP 50 - IN-LINE PUMPS

Pumped liquid temperature range: from -15 °C to +120 °C - Maximum ambient temperature: +40 °C

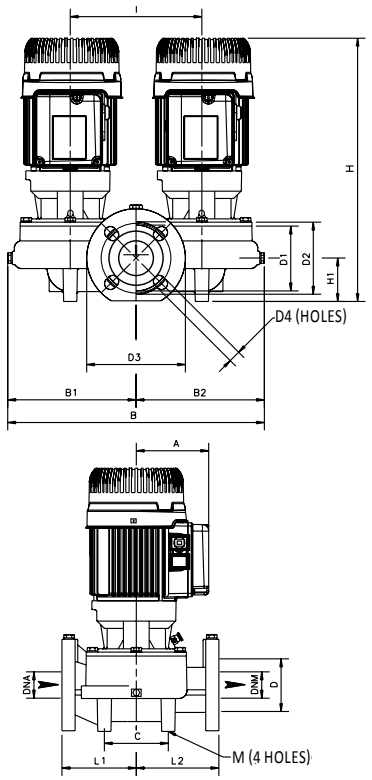

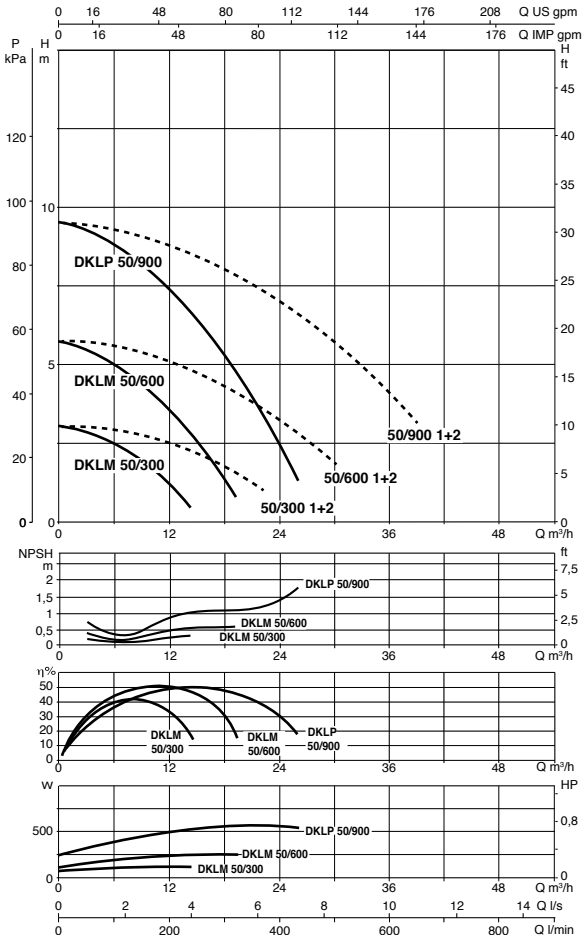

The performance curves are based on kinematic viscosity values = 1 mm²/s and density equal to 1000 kg/m³. Curve tolerance according to ISO 9906.

For the MEI index refer to the hydraulic data of the individual pump.

MODEL	CENTRE DISTANCE	PUMP CONNECTIONS	ELECTRICAL DATA									
			POWER INPUT 50 Hz	POLES	MOTOR TYPE	n r.p.m.	P1 MAX kW	P2 NOMINAL		In A	CAPACITOR	
								kW	HP		µF	Vc
DKLM 50-300 M	280	DN 50	1 x 220 - 240 V ~	4	-	1410	0,21	0,11	0,15	1,1	8	450
DKLM 50-300 T	280	DN 50	3 x 230 - 400 V ~	4	-	1463	0,16	0,11	0,15	1,02-0,59	-	-
DKLM 50-600 M	280	DN 50	1 x 220 - 240 V ~	4	-	1275	0,3	0,22	0,3	1,55	8	450
DKLM 50-600 T	280	DN 50	3 x 230 - 400 V ~	4	-	1399	0,32	0,22	0,3	1,28-0,74	-	-
DKLP 50-900 M	280	DN 50	1 x 220 - 240 V ~	2	-	2898	0,7	0,51	0,69	4,02	20	450
DKLP 50-900 T	280	DN 50	3 x 230 - 400 V ~	2	IE3	2897	0,63	0,51	0,69	3,39-1,96	-	-

MODEL	A	B	B1	B2	C	DNA	DNM	D	D1	D2	D3	D4	H	H1	I	L	L1	L2	M	PACKING DIMENSIONS			VOLUME (m³)	WEIGHT Kg
																				L/A	L/B	H		
DKLM 50-300 M-T	110	434	217	217	120	50	50	90	110	125	165	4 HOLES 18x25,5	410	73	240	280	140	170	4 HOLES 14	540	420	610	0,138	51
DKLM 50-600 M-T	110	434	217	217	120	50	50	90	110	125	165		414	73	240	280	140	170		540	420	610	0,138	52
DKLP 50-900 M-T	110	434	217	217	120	50	50	90	110	125	165		414	73	240	280	140	170		540	420	610	0,138	54

DAB PUMPS reserves the right to make modifications without notice.

DKLM / DKLP 50 - IN-LINE PUMPS

Pumped liquid temperature range: from -15 °C to +120 °C - Maximum ambient temperature: +40 °C

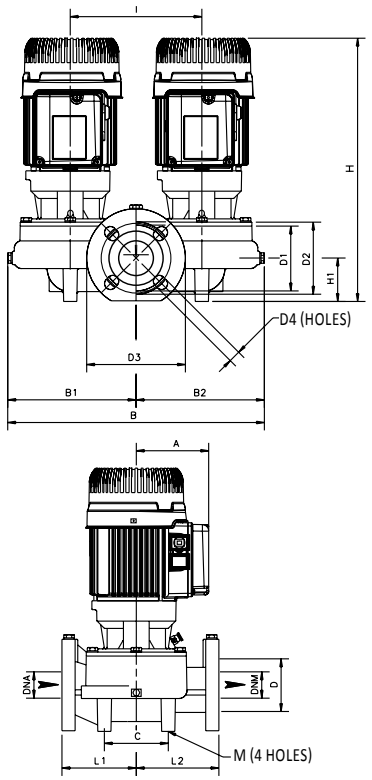

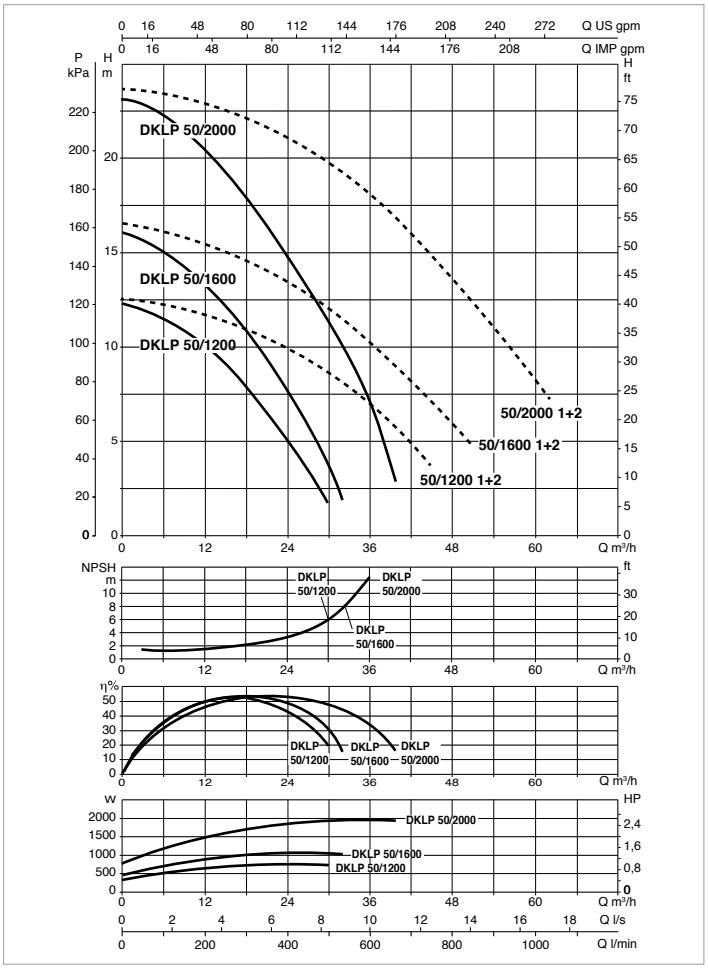

The performance curves are based on kinematic viscosity values = 1 mm²/s and density equal to 1000 kg/m³. Curve tolerance according to ISO 9906.

For the MEI index refer to the hydraulic data of the individual pump.

MODEL	CENTRE DISTANCE	PUMP CONNECTIONS	ELECTRICAL DATA									
			POWER INPUT 50 Hz	POLES	MOTOR TYPE	n r.p.m.	P1 MAX kW	P2 NOMINAL		In A	CAPACITOR	
								kW	HP		µF	Vc
DKLP 50-1200 M	280	DN 50	1 x 220 - 240 V ~	2	-	2840	0,9	0,72	0,98	4,93	20	450
DKLP 50-1200 T	280	DN 50	3 x 230 - 400 V ~	2	IE3	2842	0,87	0,72	0,97	3,72-2,15	-	-
DKLP 50-1600 M	280	DN 50	1 x 220 - 240 V ~	2	-	2844	1,6	1,01	1,37	7,15	40	450
DKLP 50-1600 T	280	DN 50	3 x 230 - 400 V ~	2	IE3	2746	1,35	1,01	1,38	4,05-2,32	-	-
DKLP 50-2000 M	280	DN 50	1 x 220 - 240 V ~	2	-	2754	2,43	1,83	2,49	11,06	40	450
DKLP 50-2000 T	280	DN 50	3 x 230 - 400 V ~	2	IE3	2832	2,3	1,83	2,49	6,77-3,9	-	-

MODEL	A	B	B1	B2	C	DNA	DNM	D	D1	D2	D3	D4	H	H1	I	L	L1	L2	M	PACKING DIMENSIONS			VOLUME (m³)	WEIGHT Kg
																				L/A	L/B	H		
DKLP 50-1200 M-T	110	434	217	217	120	50	50	90	110	125	165	4 HOLES 18x25,5	414	73	240	280	140	170	4 HOLES 14	540	420	610	0,138	54,2
DKLP 50-1600 M-T	110	434	217	217	120	50	50	90	110	125	165		414	73	240	280	140	170		540	420	610	0,138	54,5
DKLP 50-2000 M-T	110	434	217	217	120	50	50	90	110	125	165		423	73	240	280	140	170		540	420	610	0,138	58,5

DKLM / DKLP 65 - IN-LINE PUMPS

Pumped liquid temperature range: from -15 °C to +120 °C - Maximum ambient temperature: +40 °C

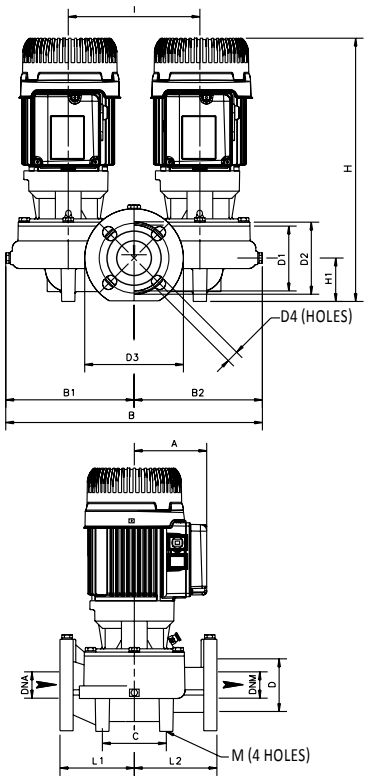

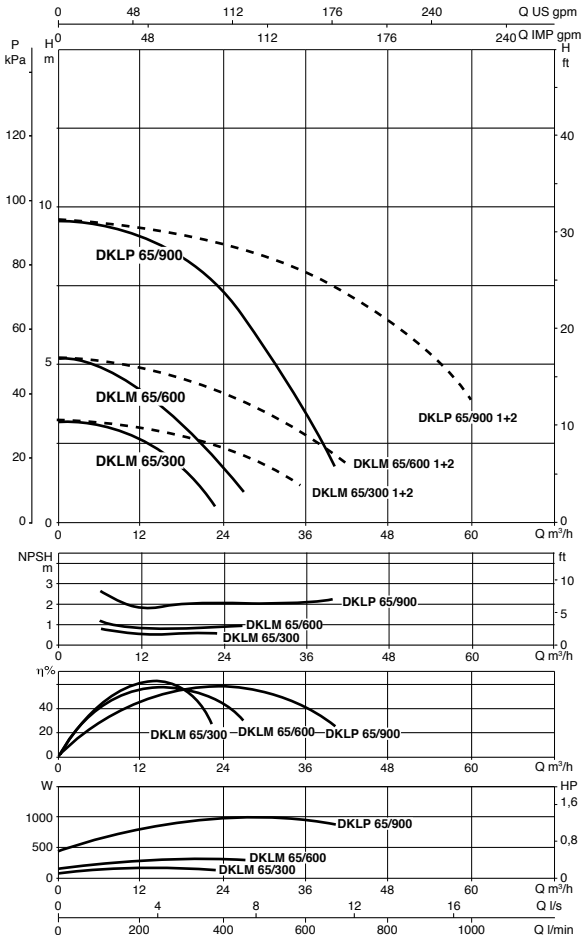

The performance curves are based on kinematic viscosity values = 1 mm²/s and density equal to 1000 kg/m³. Curve tolerance according to ISO 9906.

For the MEI index refer to the hydraulic data of the individual pump.

MODEL	CENTRE DISTANCE	PUMP CONNECTIONS	ELECTRICAL DATA							
			POWER INPUT 50 Hz	POLES	MOTOR TYPE	n r.p.m.	P1 MAX kW	P2 NOMINAL		In A
								kW	HP	
DKLM 65-300 T	340	DN 65	3 x 230 - 400 V ~	4	-	1445	0,2	0,15	0,2	1,07-0,62
DKLM 65-600 T	340	DN 65	3 x 230 - 400 V ~	4	-	1391	0,36	0,24	0,33	1,30-0,75
DKLP 65-900 T	340	DN 65	3 x 230 - 400 V ~	2	IE3	2937	0,9	0,8	1,09	5,05-2,92

MODEL	A	B	B1	B2	C	DNA	DNM	D	D1	D2	D3	D4	H	H1	I	L	L1	L2	M	PACKING DIMENSIONS			VOLUME (m³)	WEIGHT Kg
																				L/A	L/B	H		
DKLM 65-300 T	110	455	226	229	100	65	65	110	130	145	185	4 HOLES 18x25,5	433	82	240	340	170	170	4 HOLES 14	540	520	610	0,138	55
DKLM 65-600 T	110	455	226	229	100	65	65	110	130	145	185		433	82	240	340	170	170		540	520	610	0,138	62
DKLP 65-900 T	114	455	226	229	100	65	65	110	130	145	185		443	82	240	340	170	170		540	520	610	0,138	66

DAB PUMPS reserves the right to make modifications without notice.

DKLM / DKLP 65 - IN-LINE PUMPS

Pumped liquid temperature range: from -15 °C to +120 °C - Maximum ambient temperature: +40 °C

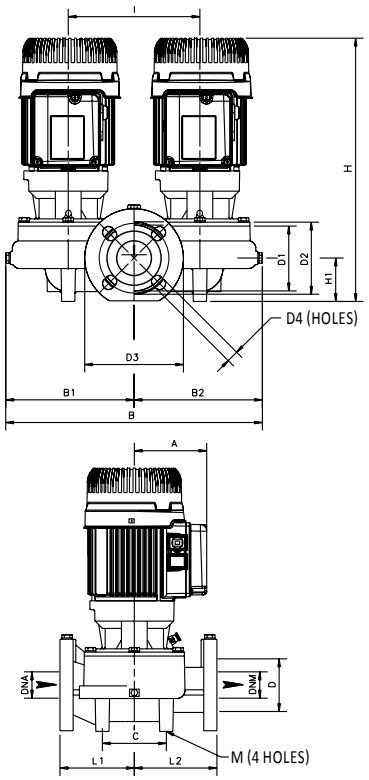

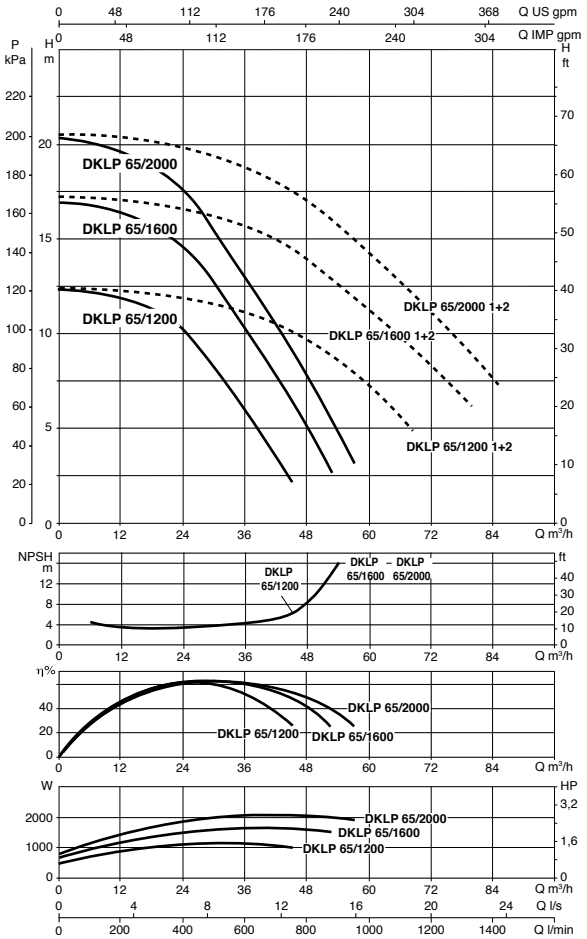

The performance curves are based on kinematic viscosity values = 1 mm²/s and density equal to 1000 kg/m³. Curve tolerance according to ISO 9906.

For the MEI index refer to the hydraulic data of the individual pump.

MODEL	CENTRE DISTANCE	PUMP CONNECTIONS	ELECTRICAL DATA							
			POWER INPUT 50 Hz	POLES	MOTOR TYPE	n r.p.m.	P1 MAX kW	P2 NOMINAL		In A
								kW	HP	
DKLP 65-1200 T	340	DN 65	3 x 230 - 400 V ~	2	IE3	2910	1,2	1,12	1,52	5,64-3,26
DKLP 65-1600 T	340	DN 65	3 x 230 - 400 V ~	2	IE3	2863	1,97	1,65	2,25	6,49-3,75
DKLP 65-2000 T	340	DN 65	3 x 230 - 400 V ~	2	IE3	2828	2,57	2	2,72	7,7-4,5

MODEL	A	B	B1	B2	C	DNA	DNM	D	D1	D2	D3	D4	H	H1	I	L	L1	L2	M	PACKING DIMENSIONS			VOLUME (m³)	WEIGHT Kg
																				L/A	L/B	H		
DKLP 65-1200 T	114	455	226	229	100	65	65	110	130	145	185	4 HOLES 18x23	443	82	240	340	170	170	4 HOLES 14	540	520	610	0,138	66,2
DKLP 65-1600 T	114	455	226	229	100	65	65	110	130	145	185		443	82	240	340	170	170		540	520	610	0,138	66,5
DKLP 65-2000 T	118	455	226	229	100	65	65	110	130	145	185		517	82	240	340	170	170		540	420	800	0,189	72,5

DAB PUMPS reserves the right to make modifications without notice.

DKLM / DKLP 80 - IN-LINE PUMPS

Pumped liquid temperature range: from -15 °C to +120 °C - Maximum ambient temperature: +40 °C

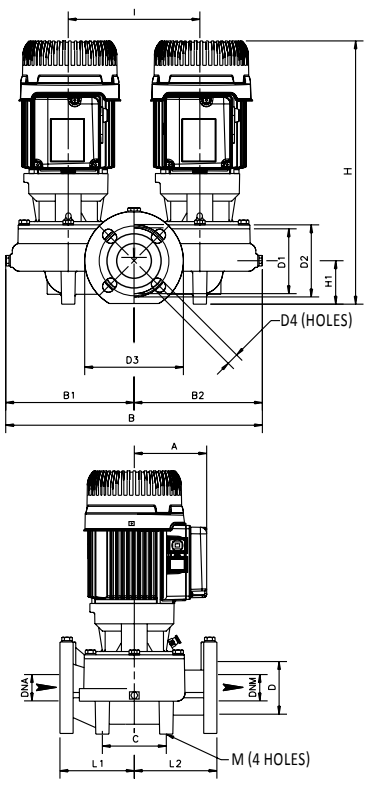

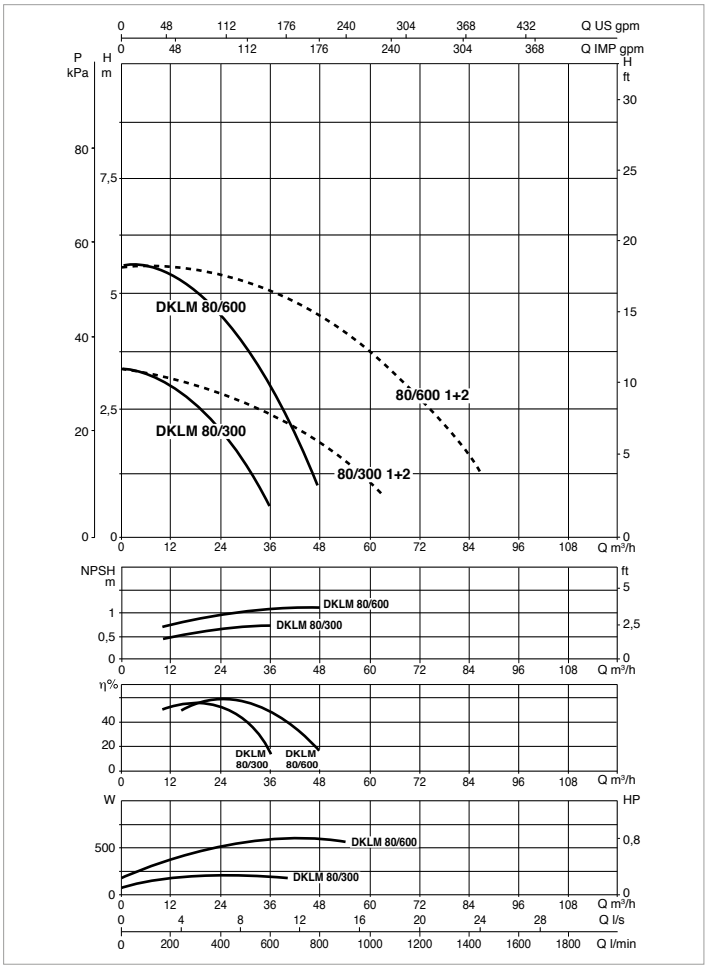

The performance curves are based on kinematic viscosity values = 1 mm²/s and density equal to 1000 kg/m³. Curve tolerance according to ISO 9906.

For the MEI index refer to the hydraulic data of the individual pump.

MODEL	CENTRE DISTANCE	PUMP CONNECTIONS	ELECTRICAL DATA							
			POWER INPUT 50 Hz	POLES	MOTOR TYPE	n r.p.m.	P1 MAX kW	P2 NOMINAL		In A
								kW	HP	
DKLM 80-300 T	360	DN 80	3 x 230 - 400 V ~	4	-	1460	0,36	0,25	0,33	1,2-0,7
DKLM 80-600 T	360	DN 80	3 x 230 - 400 V ~	4	IE3	1400	0,75	0,75	1	2,8-1,6

MODEL	A	B	B1	B2	C	DNA	DNM	D	D1	D2	D3	D4	H	H1	I	L	L1	L2	M	PACKING DIMENSIONS			VOLUME (m³)	WEIGHT Kg
																				L/A	L/B	H		
DKLM 80-300 T	110	463	230	233	115	80	80	128	150	160	200	4 HOLES 18x23	453	97	240	360	190	170	4 HOLES 14	540	420	610	0,138	62
DKLM 80-600 T	110	463	230	233	115	80	80	128	150	160	200		453	97	240	360	190	170		540	420	610	0,138	70

DAB PUMPS reserves the right to make modifications without notice.

DKLM / DKLP 80 - IN-LINE PUMPS

Pumped liquid temperature range: from -15 °C to +120 °C - Maximum ambient temperature: +40 °C

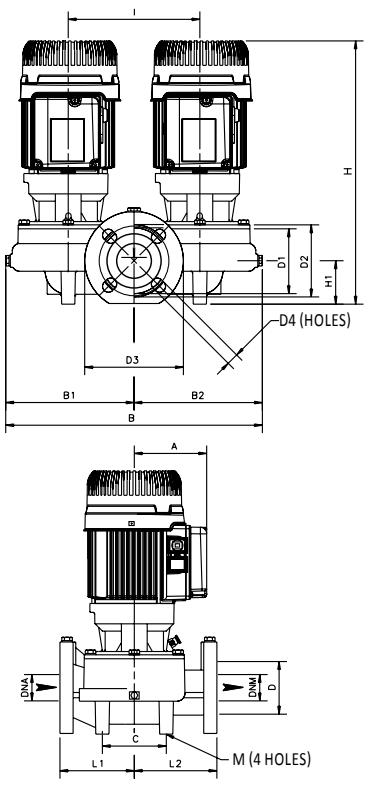

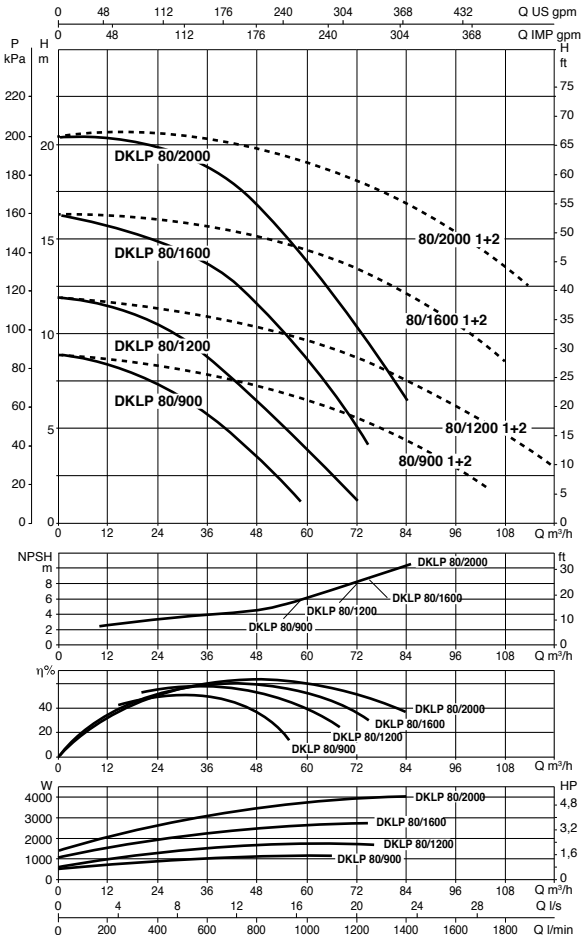

The performance curves are based on kinematic viscosity values = 1 mm²/s and density equal to 1000 kg/m³. Curve tolerance according to ISO 9906.

For the MEI index refer to the hydraulic data of the individual pump.

MODEL	CENTRE DISTANCE	PUMP CONNECTIONS	ELECTRICAL DATA							
			POWER INPUT 50 Hz	POLES	MOTOR TYPE	n r.p.m.	P1 MAX kW	P2 NOMINAL		In A
								kW	HP	
DKLP 80-900 T	360	DN 80	3 x 230 - 400 V ~	2	IE3	2920	1,5	1,84	2,5	5,2-3
DKLP 80-1200 T	360	DN 80	3 x 230 - 400 V ~	2	IE3	2840	2,1	1,84	2,5	6,6-3,8
DKLP 80-1600 T	360	DN 80	3 x 230 - 400 V ~	2	IE3	2796	3,3	2,55	3,5	10,28- 5,94
DKLP 80-2000 T	360	DN 80	3 x 230 - 400 V ~	2	IE3	2868	4,7	3,67	5	14,9-8,42

MODEL	A	B	B1	B2	C	DNA	DNM	D	D1	D2	D3	D4	H	H1	I	L	L1	L2	M	PACKING DIMENSIONS			VOLUME (m³)	WEIGHT Kg
																				L/A	L/B	H		
DKLP 80-900 T	118	463	230	233	115	80	80	128	150	160	200	4 HOLES 18x23	537	97	240	360	190	170	4 HOLES 14	540	420	800	0,189	78
DKLP 80-1200 T	118	463	230	233	115	80	80	128	150	160	200		537	97	240	360	190	170		540	420	800	0,189	78
DKLP 80-1600 T	118	463	230	233	115	80	80	128	150	160	200		537	97	240	360	190	170		540	420	800	0,189	81,2
DKLP 80-2000 T	135	463	230	233	115	80	80	128	150	160	200		526	97	240	360	190	170		540	420	800	0,189	93,2

DAB PUMPS reserves the right to make modifications without notice.

CM / CM-G / DCM / DCM-G

IN-LINE PUMPS

TECHNICAL DATA

Operating range: from 1,2 to 420 m3/h with head of up to 41 metres
Pumped liquid: clean, free of solids and abrasives, non-viscous, non-aggressive, non-crystallised and chemically neutral, with properties similar to water. Maximum, glycol content 30 % (for other glycol percentages contact Technical Support)
Liquid temperature range:
from -10 °C to +130 °C for DN 40 - DN 50
from -10 °C to +140 °C for the remainder of the range
Maximum ambient temperature: +40 °C
Maximum operating pressure:
PN10 : for DN 40 - DN 50
PN16 : Remainder of the range
Flanging: PN 16
Special executions on request: Other voltages and/or frequencies
Protection: IP 55
Insulation: class F

APPLICATIONS

In-line port circulation pumps, suitable for heating, air conditioning, refrigeration and sanitary water systems.
Available in the single and twin versions.

CONSTRUCTION FEATURES

PN 10 - PN 16 flanged suction and delivery ports with threaded holes for control manometers.
Cast iron pump body and motor support, cast iron or technopolymer impeller depending on mode.
Stainless steel motor shaft.
External ventilation three-phase asynchronous motor. For its protection we recommend the use of remote overload cut-outs, in compliance with current local regulations.

MATERIALS

N.	PARTS*	MATERIALS
1	PUMP BODY	CAST IRON 250 UNI ISO 185
3	SUPPORT	CAST IRON 250 UNI ISO 185
4	IMPELLER	CAST IRON DN 65-80-100-125-150 / DCM Dn 40 - 50 / CM 40-1300T, CM 40-1450T, CM 50-1270T , CM 50-1420T
		TECHNOPOLYMER B CM 40-440T, CM 40-540T, CM 40-670T, CM 40-870T, CM 50-510T, CM 50-630T, CM 50-780T, CM 50-1000T
7	SHAFT WITH ROTOR	AISI 304 STAINLESS STEEL X5 CrNiS 1809 UNI 6900/71
16	MECHANICAL SEAL	CARBON/GRAPHITE
28	OR RING	EPDM RUBBER

* In contact with the liquid

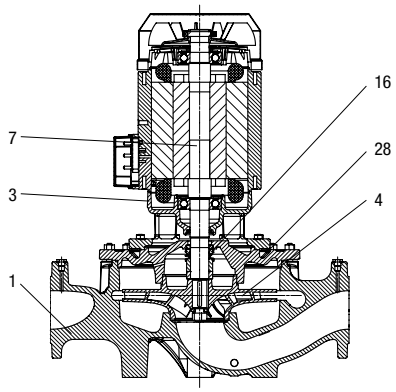

CM / CM-G / DCM / DCM-G

IN-LINE PUMPS

- Denominations:
(example)

D C M - G 65 420 A BAQE 0,25

- Single pump
D - Twin pump

Circulator

M = 4-pole motor
M = 2-pole motor

G = version with coupling

(DN) nominal diameter
of the flanged ports

Maximum head (cm)

A - Cast iron impeller
B - Bronze impeller

Mechanical seal type

Motor P2 in kW

Installation: horizontal or vertical position, provided that the motor is always above the pump.
Vertical installation only for powers exceeding 7,5 kW.

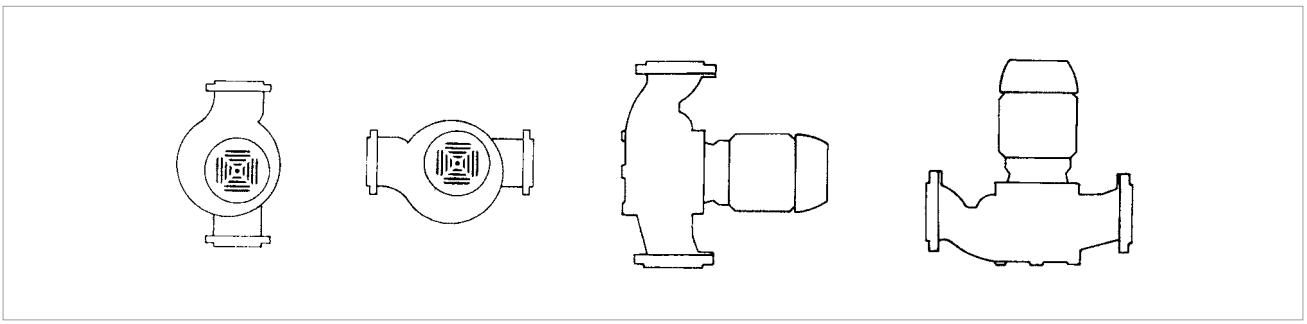

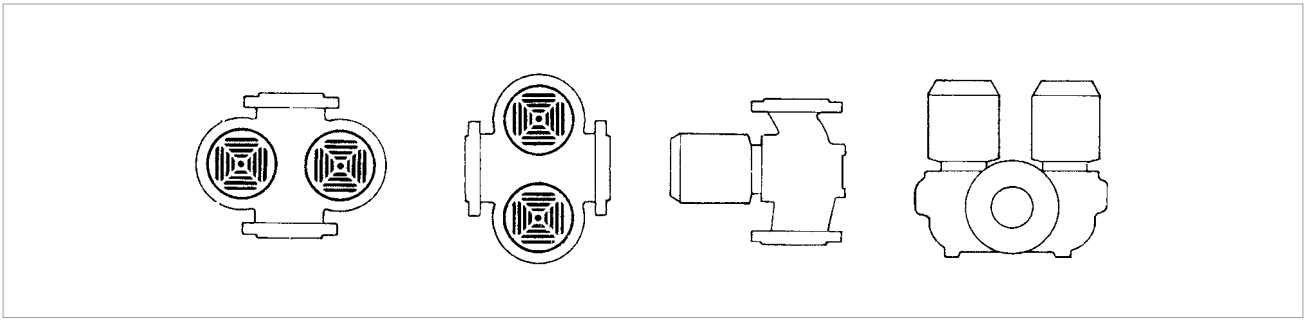

DAB PUMPS reserves the right to make modifications without notice.

PERFORMANCE RANGE

The performance curves are based on kinematic viscosity values = 1 mm^2/s and density equal to 1000 kg/m^3. Curve tolerance according to ISO 9906.

GRAPHIC SELECTION TABLE

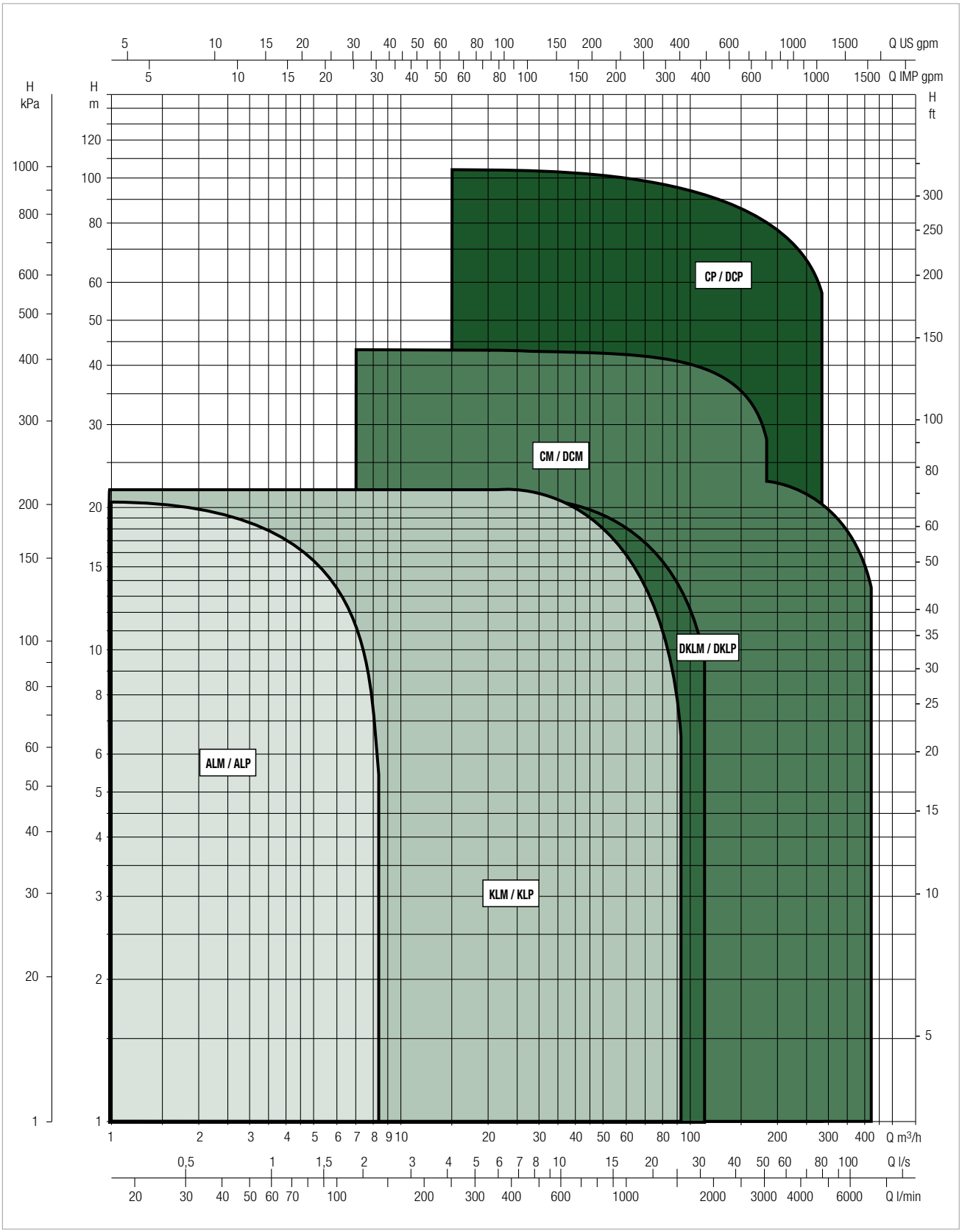

CM / CM-G / DCM / DCM-G

IN-LINE PUMPS

SELECTION TABLE - CM / CM-G - 4 POLES

MODEL	Q=m³h	0	1,2	2,4	3	3,6	4,8	6	12	18	24	30	36	42	48
	Q=l/min	0	20	40	50	60	80	100	200	300	400	500	600	700	800
CM 40-440 T	H (m)	4,4	4,4	4,3	4,3	4,2	4	3,6							
CM 40-540 T		5,6	5,6	5,6	5,6	5,5	5,4	5	1,8						
CM 40-670 T		6,9	6,9	6,9	6,9	6,8	6,6	6,3	3,2						
CM 40-870 T		8,7	8,7	8,6	8,6	8,5	8,4	8,3	5,1						
CM 40-1300 T					13	12,9	12,5	12,4	9,8	6					
CM 40-1450 T							14,4	14,3	11,8	8					

MODEL	Q=m³h	0	1,2	2,4	3	3,6	4,8	6	12	18	24	30	36	42	48
	Q=l/min	0	20	40	50	60	80	100	200	300	400	500	600	700	800
CM 50-510 T	H (m)					5	4,6	4,2							
CM 50-630 T						6,2	5,8	5,5							
CM 50-780 T						7,7	7,4	7,1							
CM 50-1000 T						10,1	9,8	9,6	6,8						
CM 50-1270 T								12,7	11,2	8,5					
CM 50-1420 T								14,2	13	10	6				

MODEL	Q=m³h	0	1,2	2,4	3	3,6	4,8	6	12	18	24	30	36	42	48
	Q=l/min	0	20	40	50	60	80	100	200	300	400	500	600	700	800
CM-G 65-420/A/BAQE/0,25	H (m)	4,2						4,1	3,7	3	2,1				
CM-G 65-540/A/BAQE/0,37		5,4						5,3	5	4,4	3,5				
CM-G 65-660/A/BAQE/0,55		6,6						6,5	6,2	5,7	4,8				
CM-G 65-760/A/BAQE/0,55		7,6						7,7	7,6	6,7	5,5				
CM-G 65-920/A/BAQE/0,75		9,2						9,2	9	8,4	7,4	5,7			
CM-G 65-1080/A/BAQE/1,1		10,8							10,8	10,6	10,2	9,5	8,6	7,3	
CM-G 65-1200/A/BAQE/1,5		12							12	11,9	11,5	10,8	10,1	8,9	
CM-G 65-1530/A/BAQE/2,2		15,3							15,3	15,2	14,8	14	13,3	12,1	10,8
CM-G 65-1680/A/BAQE/3		16,8							16,8	16,5	16,1	15,5	14,6	13,6	12,4
CM-G 65-2380/A/BAQE/4		23,8							24	23,8	23,4	22,7	21,6	20,4	19

DAB PUMPS reserves the right to make modifications without notice.

SELECTION TABLE - CM / CM-G - 4 POLES

MODEL	Q=m³h	0	12	18	24	30	36	42	48	60	72	84	90	102	114	120	150	180
	Q=l/min	0	200	300	400	500	600	700	800	1000	1200	1400	1500	1700	1900	2000	2500	3000
CM-G 80-550/A/BAQE/0,55	H (m)	5,5	5,2	5	4,7	4,3	3,9	3,3	2,6									
CM-G 80-650/A/BAQE/0,75		6,5	6,3	6,1	5,8	5,5	5	4,5	3,9									
CM-G 80-740/A/BAQE/1,1		7,4	7,4	7,3	7,2	6,9	6,7	6,3	5,8	4,4								
CM-G 80-890/A/BAQE/1,5		8,9		8,8	8,7	8,6	8,3	8	7,6	6,6								
CM-G 80-1050/A/BAQE/2,2		10,5			10,4	10,3	10,2	9,9	9,6	8,8								
CM-G 80-1530/A/BAQE/3		15,3			15,4	15,3	15	14,6	14,1	12,9	11,3							
CM-G 80-1700/A/BAQE/4		17			17,2	17,2	17,1	16,8	16,5	15,7	14,3	12,6						
CM-G 80-2410/A/BAQE/5,5		24,1			23,8	23,6	23,3	22,8	22,3	20,8	18,6							
CM-G 80-2700/A/BAQE/7,5		27						26	25,5	24,5	22,7	20,2	19					
CM-G 80-3420/A/BAQE/11		34,2						33,2	33	32	30,7	29	28	25	21,7			

MODEL	Q=m³h	0	12	18	24	30	36	42	48	60	72	84	90	102	114	120	150	180
	Q=l/min	0	200	300	400	500	600	700	800	1000	1200	1400	1500	1700	1900	2000	2500	3000
CM-G 100-510/ A/BAQE/0,75	H (m)	5,1	4,9	4,8	4,7	4,7	4,4	4,2	3,8	3								
CM-G 100-650/A/BAQE/1,1		6,5	6,4	6,4	6,3	6,2	6	5,8	5,5	4,6								
CM-G 100-660/A/BAQE/1,5		6,6				6,4	6,3	6,2	6	5,6	5	4,5	4,3	3,7	3			
CM-G 100-865/A/BAQE/2,2		8,6				8,5	8,5	8,3	8,2	7,7	7,2	6,7	6,3	5,7	4,9	4,6		
CM-G 100-1020/A/BAQE/3		10,2				10,2	10,1	10	9,9	9,7	9,3	8,8	8,6	7,9	7,2	6,7		
CM-G 100-1320/A/BAQE/4		13,2						13,2	13,2	12,9	12,4	11,7	11,3	10,4	9,3	8,7		
CM-G 100-1650/ A/BAQE/5,5		16,5						16,6	16,5	16,2	16	15,4	15	14,3	13,3	12,7		
CM-G 100-2050/ A/BAQE/7,5		20,5						21	21	20,7	20	19,5	19	18	16,7	16		
CM-G 100-2550/A/BAQE/11		25,5						25,5	25,5	25,1	25	24,2	24	23	21,5	21		
CM-G 100-3290/A/BAQE/15		32,9								33	32,8	32	31,6	30,5	29,5	28,9	24	
CM-G 100-3680/ A/BAQE/18,5		36,8								37	36,8	36,5	36,1	35,5	34,5	34	29,5	
CM-G 100-4100/A/BAQE/22		41								41,4	41	40,6	40,5	39,8	39	38,5	34,8	29

DAB PUMPS reserves the right to make modifications without notice.

CM / CM-G / DCM / DCM-G

IN-LINE PUMPS

SELECTION TABLE - CM / CM-G - 4 POLES

MODEL	Q=m³h	0	60	72	84	90	102	114	120	150	180	210
	Q=l/min	0	1000	1200	1400	1500	1700	1900	2000	2500	3000	3500
CM-G 125-1075/A/BAQE/4	H (m)	10,8	10,1	10	9,7	9,5	9,1	8,5	8,3	7	5,4	
CM-G 125-1270/ A/BAQE/5,5		12,7	12,6	12,5	12,4	12,3	12	11,5	11,4	10,1	8,5	
CM-G 125-1560/ A/BAQE/7,5		15,6	15,4	15,3	15,1	15	14,7	14,5	14,3	13,3	11,6	9,8
CM-G 125-2100/ A/BAQE/11		21	21,5	21,5	21,2	21	20,9	20	19,8	18	16	
CM-G 125-2550/ A/BAQE/15		25,5	25,5	25,5	25,1	25,1	25	24,5	24	22,5	20,5	17,5
CM-G 125-3200/ A/BAQE/18,5		32			31,5	31,4	31	30,5	28,8	26	23	
CM-G 125-3600/ A/BAQE/22		36			35,5	35,2	35	34,6	33,2	31	28	24
CM-G 125-4022/ A/BAQE/30		40,2			39,7	39,3	39,1	38,7	37,1	34,6	31,3	26,8

MODEL	Q=m³h	0	84	90	102	114	120	150	180	210	250	300	360	390	420
	Q=l/min	0	1400	1500	1700	1900	2000	2500	3000	3500	4167	5000	6000	6500	7000
CM-G 150-955/A/BAQE/5,5	H (m)	9,6		9,6	9,6	9,4	9,3	8,7	7,8	6,7	5,5				
CM-G 150-1322/A/BAQE/7,5		13,2		13	12,8	12,6	12,5	11,9	11,1	10,1	8,5				
CM-G 150-1600/A/BAQE/11		16			15,5	15,5	15,4	14,8	14	13	11	9,2			
CM-G 150-1950/A/BAQE/15		19,5			19,5	19,4	19,3	19,2	18,7	17,8	16	14,1	10,9		
CM-G 150-2200/A/BAQE/18,5		22			22	21,9	21,8	21,7	21,4	20,5	19	17,2	14	12	
CM-G 150-2405/A/BAQE/22		24,1			23,9	23,9	23,8	23,6	23,2	22,7	21,8	20,2	17,5	15,6	14

SELECTION TABLE - DCM - 4 POLES

MODEL	Q=m³h	1,8	2,4	3,0	4,5	6	9	10,5	12	13,5	15	18
	Q=l/min	30	40	50	75	100	150	175	200	225	250	300
DCM 40/380 T	H (m)	3,8	3,7	3,6	3,15	2,6						
DCM 40/460 T			4,6	4,5	4,1	3,6	2,2					
DCM 40/620 T				6,2	6	5,8	4,5	3,9	3			

DAB PUMPS reserves the right to make modifications without notice.

SELECTION TABLE - DCM / DCM-G - 4 POLES

MODEL	Q=m³h	1,8	2,4	3,0	4,5	6	9	10,5	12	13,5	15	18
	Q=l/min	30	40	50	75	100	150	175	200	225	250	300
DCM 50/460 T	H (m)					4,6	4,3	4,1	3,9	3,6	3,3	2,4
DCM 50/630 T						6,3	6,1	6	5,8	5,5	5,2	4,6
DCM 50/880 T						8,8	8,3	8	7,7	7,3	6,9	5,9

MODEL	Q=m³h	0	6	12	18	24	30	36	42	48	54
	Q=l/min	0	100	200	300	400	500	600	700	800	900
DCM-G 65-420/A/BAQE/0,25	H (m)	4,2	3,5	2,7	1,7	0,5					
DCM-G 65-540/A/BAQE/0,37		5,4	5,2	4,4	3,3	1,6					
DCM-G 65-660/A/BAQE/0,55		6,5	6,4	5,6	4,4	2,6					
DCM-G 65-760/A/BAQE/0,55		7,5	7,6	6,9	5,4	3,1					
DCM-G 65-920/A/BAQE/0,75		9,1	9,1	8,6	7,5	5,8	3,8				
DCM-G 65-1080/A/BAQE/1,1		10,8		10,7	10,4	9,7	8,8	7,7	6,2		
DCM-G 65-1200/A/BAQE/1,5		12		11,9	11,6	11	10	9	7,6		
DCM-G 65-1530/A/BAQE/2,2		15,3		15,2	15	14,4	13,4	12,5	11	9,5	
DCM-G 65-1680/A/BAQE/3		16,8		16,7	16,3	15,7	14,9	13,7	12,4	11	9,3
DCM-G 65-2380/A/BAQE/4		23,8		23,9	23,5	22,8	21,8	20,3	18,6	16,8	14,5

MODEL	Q=m³h	0	12	18	24	30	36	42	48	54	60	66	72	78	84	90	102	114
	Q=l/min	0	200	300	400	500	600	700	800	900	1000	1100	1200	1300	1400	1500	1700	1900
DCM-G 80-550/A/BAQE/0,55	H (m)	5,5	5,1	4,7	4,1	3,4	2,6	1,9	1,1									
DCM-G 80-650/A/BAQE/0,75		6,5	6,2	5,8	5,2	4,5	3,7	2,9	2,1									
DCM-G 80-740/A/BAQE/1,1		7,1			6,8	6,3	5,9	5,1	4,3	3,5	2,5							
DCM-G 80-890/A/BAQE/1,5		8,5			8,3	8,0	7,5	6,8	6,1	5,3	4,4	3,5						
DCM-G 80-1050/A/BAQE/2,2		10,1			10,1	9,9	9,5	9,0	8,4	7,7	6,9			3,8				
DCM-G 80-1530/A/BAQE/3		14,4			14,1	13,7	13,0	12,2	11,3	10,2	9,2	8,0	6,8					
DCM-G 80-1700/A/BAQE/4		16,0			15,7	15,5	15,3	14,6	14,0	13,2	12,3	11,2	10,0	8,9	7,7			
DCM-G 80-2410/A/BAQE/5,5		24,1					23,3	22,7	22,0	21,1	20,2	18,9	17,6	16,2				
DCM-G 80-2700/A/BAQE/7,5		27,0					26,1	26,1	25,5	24,9	24,2	23,2	22,1	20,7	19,3	17,9		
DCM-G 80-3420/A/BAQE/11		34,2					33,3	33,3	32,9	32,3	31,8	30,9	29,9	29,0	27,8	24,4	22,0	20,8

DAB PUMPS reserves the right to make modifications without notice.

CM / CM-G / DCM / DCM-G

IN-LINE PUMPS

SELECTION TABLE - DCM-G - 4 POLES

MODEL	Q=m³h	0	12	18	24	30	36	42	48	54	60	66	72	78	84	90	102	114	120	150	180
	Q=l/min	0	200	300	400	500	600	700	800	900	1000	1100	1200	1300	1400	1500	1700	1900	2000	2500	3000
DCM-G 100-510/A/BAQE/0,75	H (m)	4,9	4,8	4,7	4,6	4,5	4	3,7	3,2	2,6	2,1										
DCM-G 100-650/A/BAQE/1,1		6,3	6,3	6,3	6,1	5,9	5,5	5,1	4,6	4	3,3										
DCM-G 100-660/A/BAQE/1,5		6,6				6,4	6,2	6	5,8	5,6	5,3	4,9	4,5	4,1	3,7	3,4	2,6	1,8			
DCM-G 100-865/A/BAQE/2,2		8,6				8,5	8,4	8,1	8	7,7	7,4	7	6,6	6,1	5,7	5,2	4,2	3,2	2,8		
DCM-G 100-1020/A/BAQE/3		10,2				10,2	10	9,8	9,6	9,5	9,3	8,9	8,5	8	7,5	7,1	5,9	4,7	4		
DCM-G 100-1320/A/BAQE/4		13,2						13,2	13,1	13	12,8	12,4	11,9	11,3	10,8	10,2	8,8	7,4	6,6		
DCM-G 100-1650/A/BAQE/5,5		16,5						16,5	16,4	16,3	16	15,8	15,5	14,9	14,4	13,7	12,4	10,8	10		
DCM-G 100-2050/A/BAQE/7,5		19,3								19,2	18,8	18,5	17,9	17,6	17,2	16,6	15,5	14,1	13,3		
DCM-G 100-2550/A/BAQE/11		24								23,3	22,8	22,6	22,4	21,9	21,4	21	19,8	18,1	17,5		
DCM-G 100-3290/A/BAQE/15		30,9								30,5	30,3	30,1	29,9	29,4	28,8	28,3	27	25,8	25,1	20	
DCM-G 100-3680/A/BAQE/18,5		34,6								34,2	34	33,7	33,5	33,1	32,9	32,4	31,5	30,2	29,5	24,5	
DCM-G 100-4100/A/BAQE/22		41								41,4	41,4	41,2	41	40,8	40,6	40,5	39,8	39	38,5	34,8	29

MODEL	Q=m³h	0	60	66	72	78	84	90	102	114	120	150	180	210
	Q=l/min	0	1000	1100	1200	1300	1400	1500	1700	1900	2000	2500	3000	3500
DCM-G 125-1075/A/ BAQE/4	H (m)	10	9,5	9,4	9,2	9	8,7	8,4	7,7	6,8	6,5	4,4	2,4	
DCM-G 125-1270/A/ BAQE/5,5		11,7	11,8	11,7	11,5	11,4	11,1	10,8	10,2	9,2	8,9	6,4	3,8	
DCM-G 125-1560/A/ BAQE/7,5		14,4	14,6	14,6	14,4	14,2	14	13,8	13,2	12,7	12,3	10,2	7,5	4,9
DCM-G 125-2100/A/ BAQE/11		20,1					19,9	19,6	19,3	18,2	17,8	15,4	12,7	
DCM-G 125-2550/A/ BAQE/15		24,5					23,8	23,7	23,4	22,7	22,1	20	17,4	13,9
DCM-G 125-3200/A/ BAQE/18,5		30,7					29,6	29,3	28,6	27,7	25,9	22,2	18,3	
DCM-G 125-3600/A/ BAQE/22		34,5					33,7	33,3	32,8	32,1	30,6	27,6	23,7	19,1
DCM-G 125-4022/A/ BAQE/30		39					38,9	38,5	37,6	36,6	36,1	33,2	29,5	24,7

MODEL	Q=m³h	0	90	102	114	120	150	180	210	240	250	270	330	360	390	420
	Q=l/min	0	1500	1700	1900	2000	2500	3000	3500	4000	4167	4500	5500	6000	6500	7000
DCM-G 150-955/A/BAQE/5,5	H (m)	9,6				8,1	7	6,2	4,9	3,5	2,8					
DCM-G 150-1322/A/BAQE/7,5		11,8	11,5	11,5	11,4	11	10	8,5	7,2	6	5,5					
DCM-G 150-1600/A/BAQE/11		14,8		14,2	14,2	14	13,4	12,5	11,4	10,1	9,4	8,8	7,5			
DCM-G 150-1950/A/BAQE/15		18,1		17,9	17,8	17,7	17,5	16,9	15,9	14,8	14	13,5	12	10,5	8,9	
DCM-G 150-2200/A/BAQE/18,5		20,2		20,7	20,6	20,4	20,2	19,7	18,5	17,3	16,6	15	14,2	12,2	10,5	8,5
DCM-G 150-2405/A/BAQE/22		22,5		22,2	22	21,9	21,4	21	20	19	18,5	17,8	16	14	12	9,7

DAB PUMPS reserves the right to make modifications without notice.

CM 40 4 POLES - IN-LINE PUMPS

Pumped liquid temperature range: from -10 °C to +130 °C - Maximum ambient temperature: +40 °C

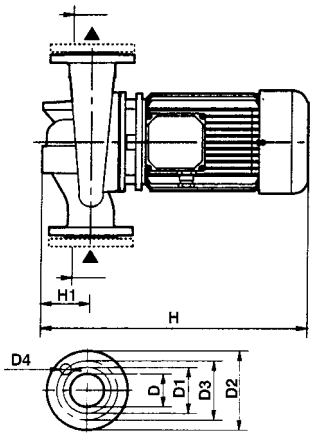

COUNTER FLANGES ON REQUEST

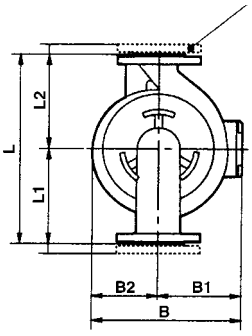

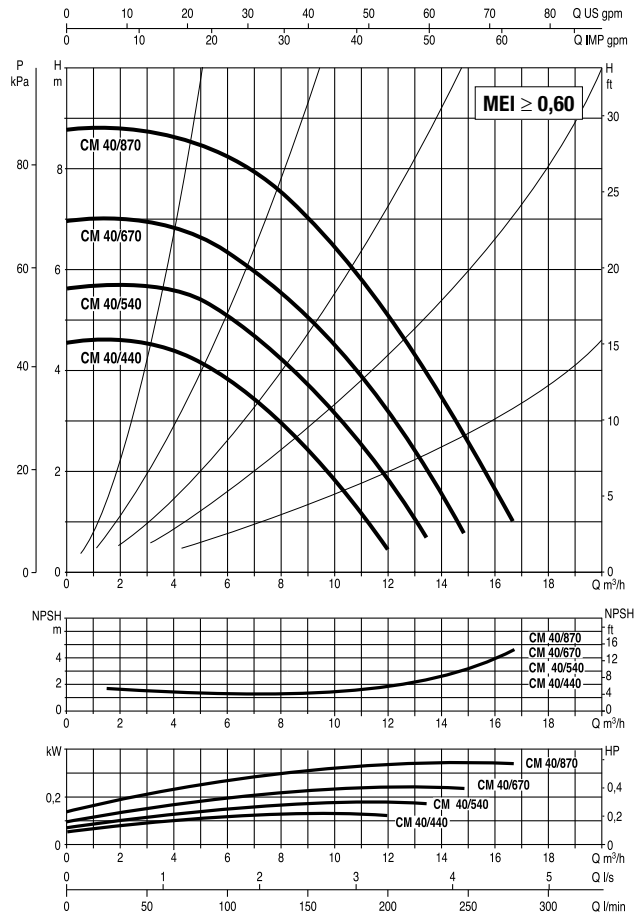

The performance curves are based on kinematic viscosity values = 1 mm^2/s and density equal to 1000 kg/m^3. Curve tolerance according to ISO 9906.

MODEL	CENTRE DISTANCE	PUMP CONNECTIONS	ELECTRICAL DATA							
			POWER INPUT 50 Hz	n r.p.m.	P1 MAX KW	P2 NOMINAL		In A		MOTOR TYPE
						kW	HP	230	400	
CM 40-440 T	390	DN 40	3 x 230 - 400 V ~	1480	0,24	0,75	1	2,2	1,3	IE3
CM 40-540 T	390	DN 40	3 x 230 - 400 V ~	1480	0,32	0,75	1	2,4	1,4	IE3
CM 40-670 T	390	DN 40	3 x 230 - 400 V ~	1480	0,39	0,75	1	2,2	1,3	IE3
CM 40-870 T	390	DN 40	3 x 230 - 400 V ~	1480	0,49	0,75	1	2,5	1,45	IE3

MODEL	L	L1	L2	B	B1	B2	H	H1	D	D1	D2	D3	D4 n° of holes	PACKING DIMENSIONS			VOLUME (m^3)	WEIGHT Kg
														L/A	L/B	H		
CM 40-440 T	390	200	190	231	118	113	453	95	40 PN 16	88	150	110	4 Ø 18	680	330	580	0,13	41
CM 40-540 T	390	200	190	231	118	113	453	95	40 PN 16	88	150	110		680	330	580	0,13	41
CM 40-670 T	390	200	190	231	118	113	453	95	40 PN 16	88	150	110		680	330	580	0,13	41
CM 40-870 T	390	200	190	231	118	113	453	95	40 PN 16	88	150	110		680	330	580	0,13	41

CM 40 4 POLES - IN-LINE PUMPS

Pumped liquid temperature range: from -10 °C to +130 °C - Maximum ambient temperature: +40 °C

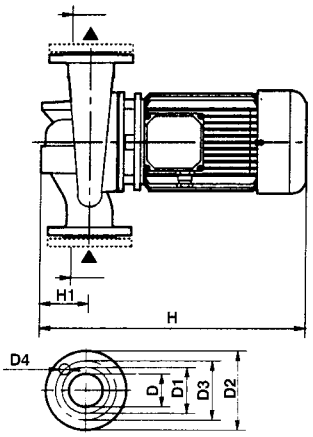

COUNTER FLANGES ON REQUEST

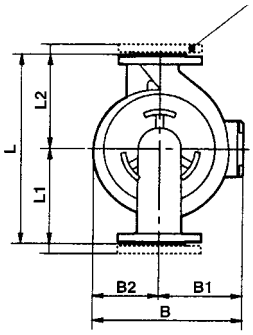

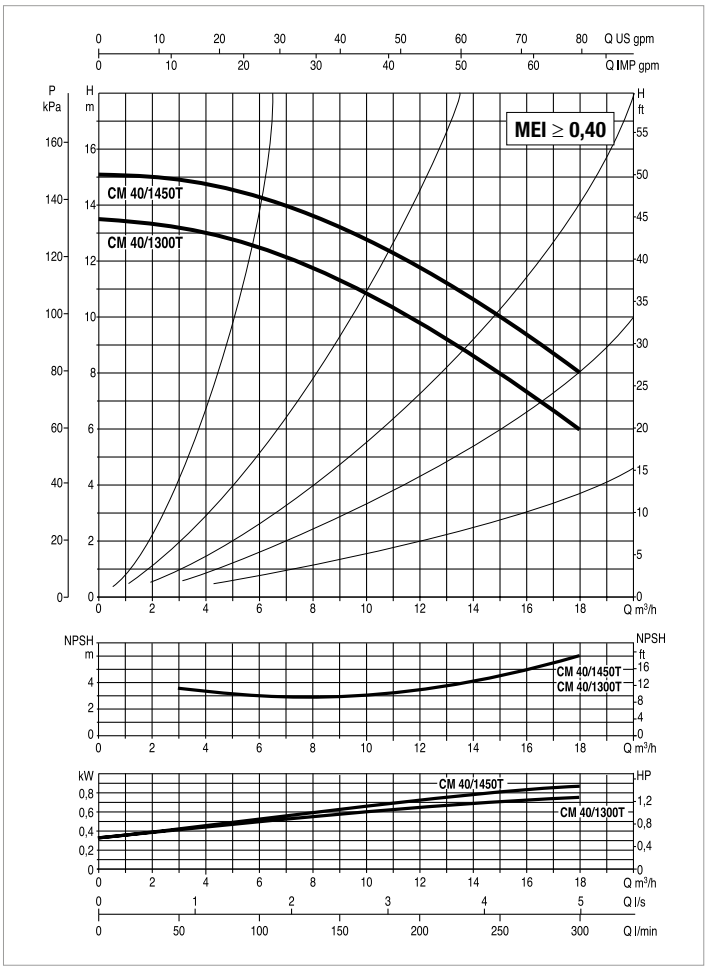

The performance curves are based on kinematic viscosity values = 1 mm^2/s and density equal to 1000 kg/m^3. Curve tolerance according to ISO 9906.

MODEL	CENTRE DISTANCE	PUMP CONNECTIONS	ELECTRICAL DATA							
			POWER INPUT 50 Hz	n r.p.m.	P1 MAX KW	P2 NOMINAL		In A		MOTOR TYPE
						kW	HP	230 V	400 V	
CM 40-1300 T	380	DN 40	3 x 230 - 400 V ~	1450	1,1	0,75	1	3,3	1,9	IE3
CM 40-1450 T	380	DN 40	3 x 230 - 400 V ~	1450	1,2	1,1	1,5	4,3	2,5	IE3

MODEL	L	L1	L2	B	B1	B2	H	H1	D	D1	D2	D3	D4 no. of holes	PACKING DIMENSIONS			VOLUME (m^3)	WEIGHT Kg
														L/A	L/B	H		
CM 40-1300 T	380	200	180	245	118	127	445	100	40 PN 6	88	150	110	4 Ø 18	450	270	465	0,056	30
CM 40-1450 T	380	200	180	245	118	127	445	100	40 PN 6	88	150	110		450	270	465	0,056	30

DAB PUMPS reserves the right to make modifications without notice.

CM 50 4 POLES - IN-LINE PUMPS

Pumped liquid temperature range: from -10 °C to +130 °C - Maximum ambient temperature: +40 °C

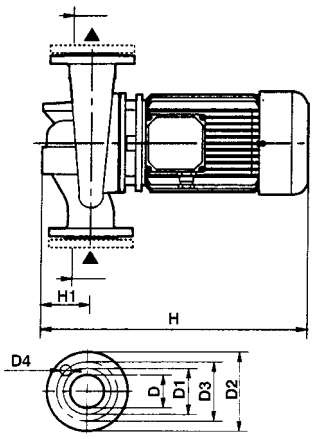

COUNTER FLANGES ON REQUEST

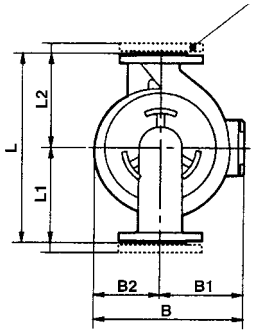

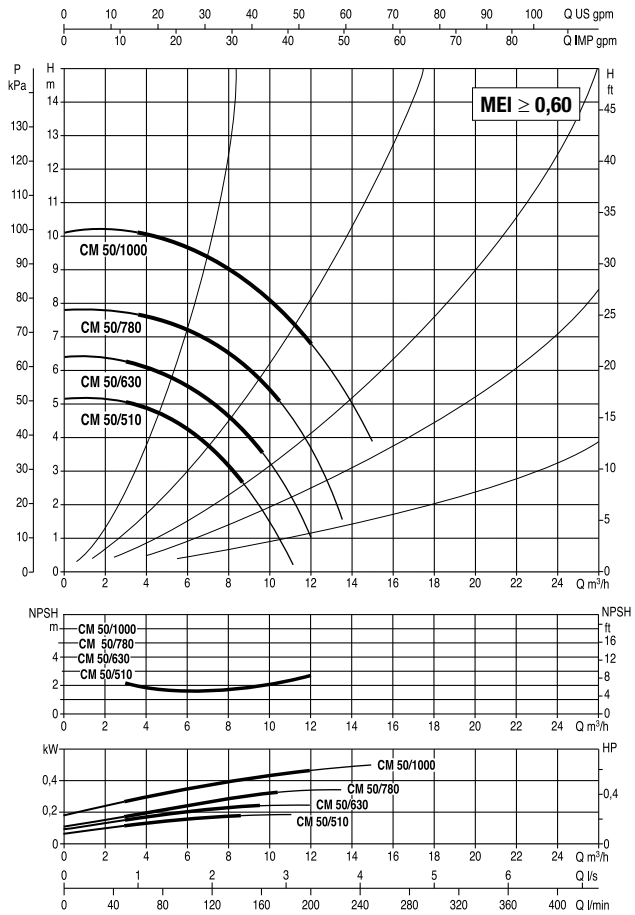

The performance curves are based on kinematic viscosity values = 1 mm^2/s and density equal to 1000 kg/m^3. Curve tolerance according to ISO 9906.

MODEL	CENTRE DISTANCE	PUMP CONNECTIONS	ELECTRICAL DATA							
			POWER INPUT 50 Hz	n r.p.m.	P1 MAX KW	P2 NOMINAL		In A		MOTOR TYPE
						kW	HP	230 V	400 V	
CM 50-510 T	425	DN 50	3 x 230 - 400 V ~	1480	0,3	0,75	1	2,4	1,4	IE3
CM 50-630 T	425	DN 50	3 x 230 - 400 V ~	1480	0,38	0,75	1	2,4	1,4	IE3
CM 50-780 T	425	DN 50	3 x 230 - 400 V ~	1470	0,47	0,75	1	2,5	1,44	IE3
CM 50-1000 T	425	DN 50	3 x 230 - 400 V ~	1470	0,64	0,75	1	2,94	1,7	IE3

MODEL	L	L1	L2	B	B1	B2	H	H1	D	D1	D2	D3	D4 no. of holes	PACKING DIMENSIONS			VOLUME (m^3)	WEIGHT Kg
														L/A	L/B	H		
CM 50-510 T	425	225	200	233	120	113	463	105	50 PN 16	102	165	125	4 Ø 18	680	330	580	0,13	46,6
CM 50-630 T	425	225	200	233	120	113	463	105	50 PN 16	102	165	125		680	330	580	0,13	46,6
CM 50-780 T	425	225	200	233	120	113	463	105	50 PN 16	102	165	125		680	330	580	0,13	46,6
CM 50-1000 T	425	225	200	233	120	113	463	105	50 PN 16	102	165	125		680	330	580	0,13	46,6

DAB PUMPS reserves the right to make modifications without notice.

CM 50 4 POLES - IN-LINE PUMPS

Pumped liquid temperature range: from -10 °C to +130 °C - Maximum ambient temperature: +40 °C

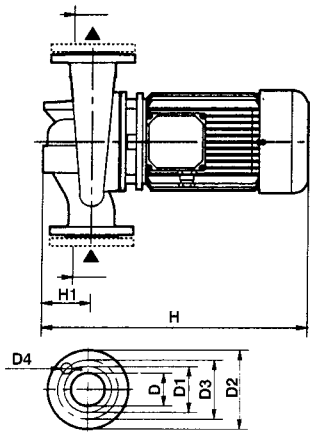

COUNTER FLANGES ON REQUEST

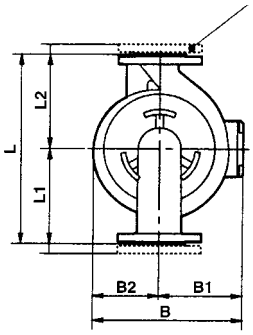

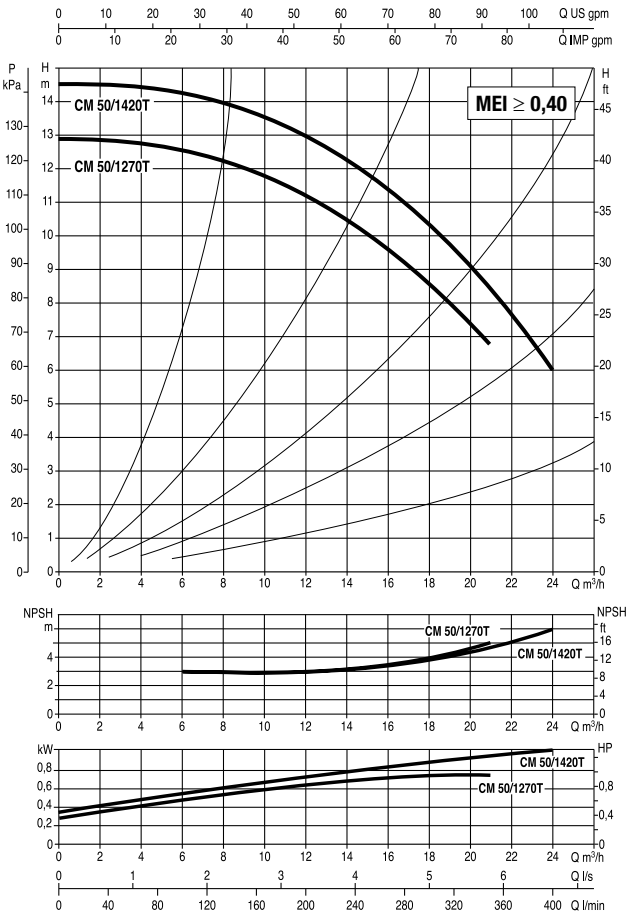

The performance curves are based on kinematic viscosity values = 1 mm^2/s and density equal to 1000 kg/m^3. Curve tolerance according to ISO 9906.

MODEL	CENTRE DISTANCE	PUMP CONNECTIONS	ELECTRICAL DATA							
			POWER INPUT 50 Hz	n r.p.m.	P1 MAX KW	P2 NOMINAL		In A		MOTOR TYPE
						kW	HP	230 V	400 V	
CM 50-1270 T	400	DN 50	3 x 230 - 400 V ~	1450	1,4	1,1	1,5	4,3	2,5	IE3
CM 50-1420 T	400	DN 50	3 x 230 - 400 V ~	1450	1,4	1,1	1,5	4,3	2,5	IE3

MODEL	L	L1	L2	B	B1	B2	H	H1	D	D1	D2	D3	D4 no. of holes	PACKING DIMENSIONS			VOLUME (m^3)	WEIGHT Kg
														L/A	L/B	H		
CM 50-1270 T	400	220	180	280	149	131	495	110	50 PN 10	102	165	125	4 Ø 18	520	320	535	0,089	36
CM 50-1420 T	400	220	180	280	149	131	495	110	50 PN 10	102	165	125		520	320	535	0,089	36

CM-G 65 4 POLES - IN-LINE PUMPS

Pumped liquid temperature range: from -10 °C to +140 °C - Maximum ambient temperature: +40 °C

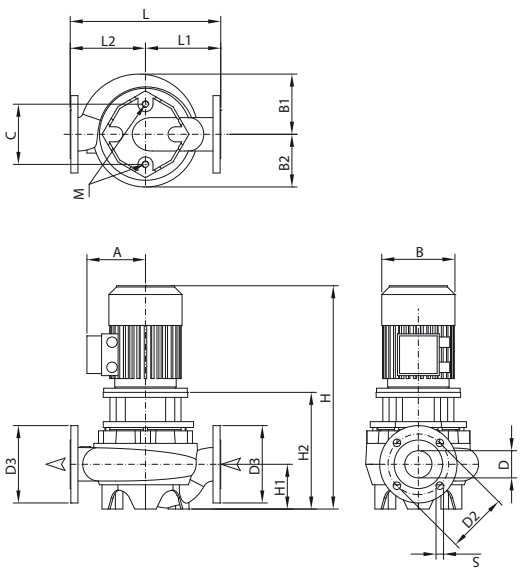

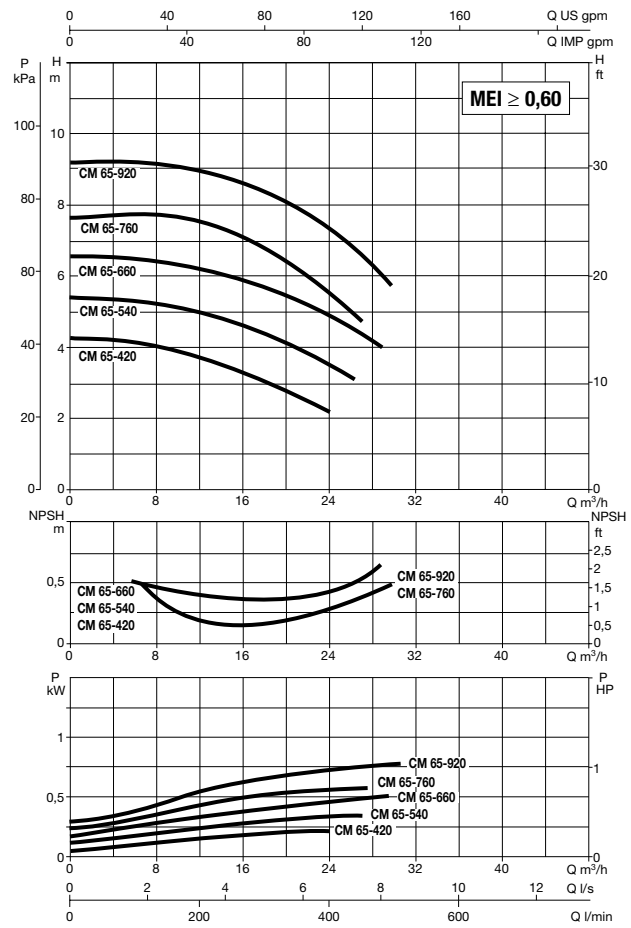

The performance curves are based on kinematic viscosity values = 1 mm^2/s and density equal to 1000 kg/m^3. Curve tolerance according to ISO 9906.

MODEL	CENTRE DISTANCE	PUMP CONNECTIONS	ELECTRICAL DATA									
			POWER INPUT 50 Hz	n r.p.m.	P1 MAX KW	P2 NOMINAL		In A		MOTOR TYPE	MOTOR SIZE	I st. A
						kW	HP	230 V	400 V			
CM-G 65-420/A/BAQE/0,25	360	DN 65	3 x 230 - 400 V ~	1400	0,4	0,25	0,33	1,6	0,9	-	MEC 71	4,6/2,6
CM-G 65-540/A/BAQE/0,37	360	DN 65	3 x 230 - 400 V ~	1380	0,6	0,37	0,5	1,7	0,98	-	MEC 71	8,1/4,6
CM-G 65-660/A/BAQE/0,55	360	DN 65	3 x 230 - 400 V ~	1400	0,8	0,55	0,75	2,6	1,5	-	MEC 80M	13,9/8
CM-G 65-760/A/BAQE/0,55	360	DN 65	3 x 230 - 400 V ~	1390	0,8	0,55	0,75	2,6	1,5	-	MEC 80M	13,9/8
CM-G 65-920/A/BAQE/0,75	360	DN 65	3 x 230 - 400 V ~	1430	1,2	0,75	1	3,12	1,8	IE3	MEC 80M	17,2/9,9

MODEL	A	B1	B2	C	D	D2	D3	S	no. of holes	H	H1	H2	L	L1	L2	M	PACKING DIMENSIONS			VOL. (m^3)	WEIGHT Kg
																	L/A	L/B	H		
CM-G 65-420/A/BAQE/0,25	124	144	126	144	65	145	185	18		479	107	254	360	180	180	M16	689	426	834	0,245	55
CM-G 65-540/A/BAQE/0,37	124	144	126	144	65	145	185	18		479	107	254	360	180	180	M16	689	426	834	0,245	55
CM-G 65-660/A/BAQE/0,55	140	144	126	144	65	145	185	18	4	534	107	279	360	180	180	M16	689	426	834	0,245	65
CM-G 65-760/A/BAQE/0,55	140	144	126	144	65	145	185	18		534	107	279	360	180	180	M16	689	426	834	0,245	73
CM-G 65-920/A/BAQE/0,75	129	144	126	144	65	145	185	18		511	107	279	360	180	180	M16	689	426	834	0,245	67

DAB PUMPS reserves the right to make modifications without notice.

CM-G 65 4 POLES - IN-LINE PUMPS

Pumped liquid temperature range: from -10 °C to +140 °C - Maximum ambient temperature: +40 °C

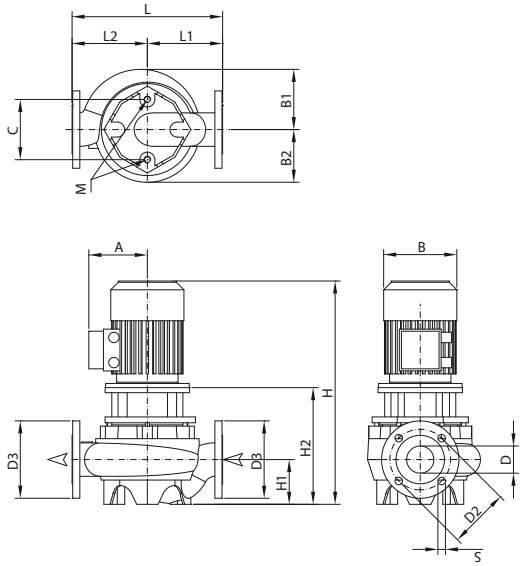

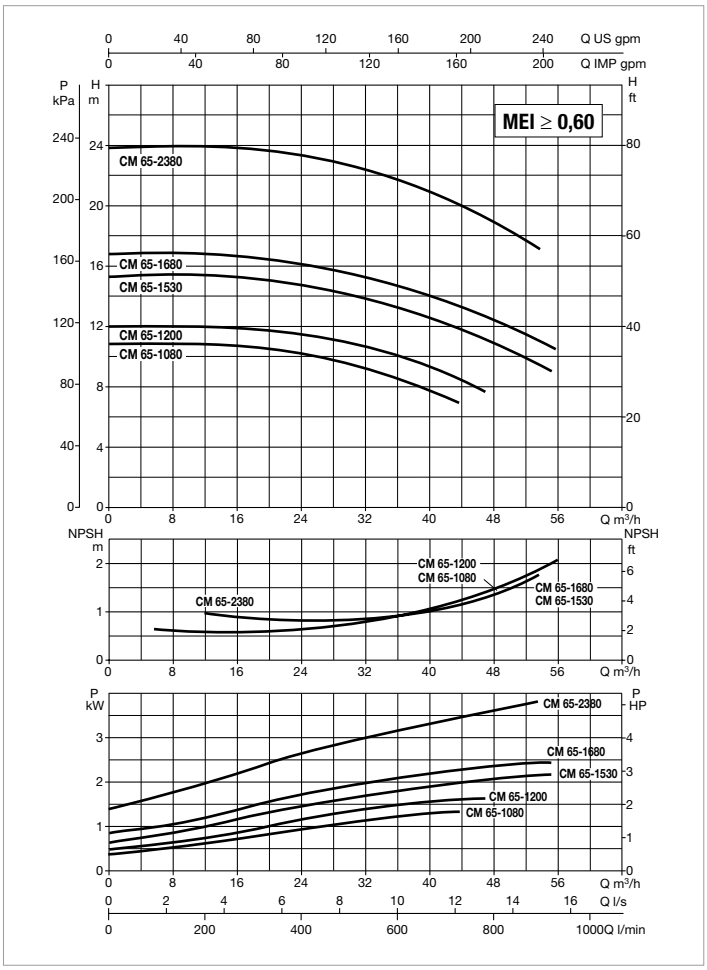

The performance curves are based on kinematic viscosity values = 1 mm^2/s and density equal to 1000 kg/m^3. Curve tolerance according to ISO 9906.

MODEL	CENTRE DISTANCE	PUMP CONNECTIONS	ELECTRICAL DATA									
			POWER INPUT 50 Hz	n r.p.m.	P1 MAX KW	P2 NOMINAL		In A		MOTOR TYPE	MOTOR SIZE	I st. A
						kW	HP	230 V	400 V			
CM-G 65-1080/A/BAQE/1,1	475	DN 65	3 x 230 - 400 V ~	1435	1,6	1,1	1,5	4,33	2,5	IE3	MEC 90S	30,7/17,8
CM-G 65-1200/A/BAQE/1,5	475	DN 65	3 x 230 - 400 V ~	1430	2	1,5	2	6,24	3,6	IE3	MEC 90L	41,2/23,8
CM-G 65-1530/A/BAQE/2,2	475	DN 65	3 x 230 - 400 V ~	1455	2,9	2,2	3	10,22	5,9	IE3	MEC 100L	60,3/34,8
CM-G 65-1680/A/BAQE/3	475	DN 65	3 x 400 V ~ [1]	1448	2,7	3	4	-	6,8	IE3	MEC 100L	55,1
CM-G 65-2380/A/BAQE/4	475	DN 65	3 x 400 V ~ [1]	1449	4,3	4	5,5	-	8,2	IE3	MEC 112M	57,8

[1] star start-up possible (λ)

MODEL	A	B1	B2	C	D	D2	D3	S	no. of holes	H	H1	H2	L	L1	L2	M	PACKING DIMENSIONS			VOL. (m^3)	WEIGHT Kg
																	L/A	L/B	H		
CM-G 65-1080/A/BAQE/1,1	138	180	164	144	65	145	185	18		557	125	291	475	237,5	237,5	M16	689	426	834	0,245	77
CM-G 65-1200/A/BAQE/1,5	138	180	164	144	65	145	185	18		597	125	291	475	237,5	237,5	M16	689	426	834	0,245	71
CM-G 65-1530/A/BAQE/2,2	145	180	164	144	65	145	185	18	4	623	125	319	475	237,5	237,5	M16	689	426	834	0,245	86
CM-G 65-1680/A/BAQE/3	145	180	164	144	65	145	185	18		623	125	319	475	237,5	237,5	M16	689	426	834	0,245	72
CM-G 65-2380/A/BAQE/4	161	180	164	144	65	145	185	18		717	125	319	475	237,5	237,5	M16	689	426	1084	0,318	92

DAB PUMPS reserves the right to make modifications without notice.

CM-G 80 4 POLES - IN-LINE PUMPS

Pumped liquid temperature range: from -10 °C to +140 °C - Maximum ambient temperature: +40 °C

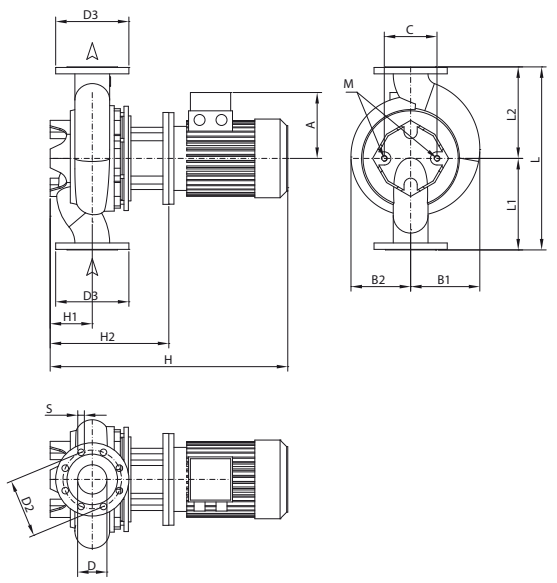

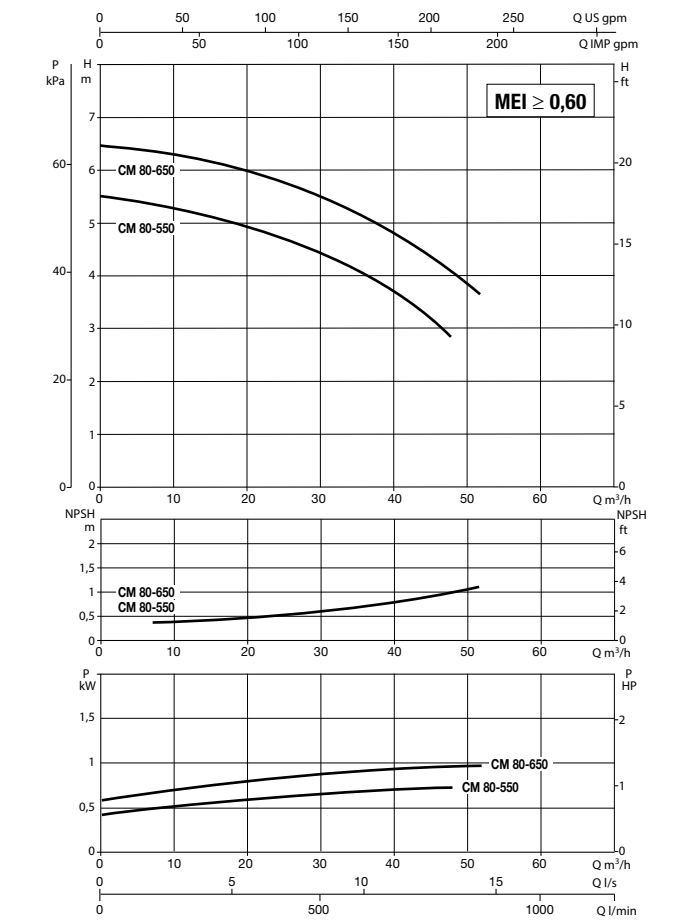

The performance curves are based on kinematic viscosity values = 1 mm^2/s and density equal to 1000 kg/m^3. Curve tolerance according to ISO 9906.

MODEL	CENTRE DISTANCE	PUMP CONNECTIONS	ELECTRICAL DATA									
			POWER INPUT 50 Hz	n r.p.m.	P1 MAX KW	P2 NOMINAL		In A		MOTOR TYPE	MOTOR SIZE	I st. A
						kW	HP	230 V	400 V			
CM-G 80-550/A/BAQE/0,55	360	DN 80	3 x 230 - 400 V ~	1390	0,8	0,55	0,75	2,6	1,5	-	MEC 80M	13,9/8
CM-G 80-650/A/BAQE/0,75	360	DN 80	3 x 230 - 400 V ~	1430	1,2	0,75	1	3,12	1,8	IE3	MEC 80M	17,2/9,9

MODEL	A	B1	B2	C	D	D2	D3	S	no. of holes	H	H1	H2	L	L1	L2	M	PACKING DIMENSIONS			VOL. (mc)	WEIGHT kg
																	L/A	L/B	H		
CM-G 80-550/A/BAQE/0,55	140	135	118	144	80	160	200	18	8	536	105	281	360	180	180	M16	689	426	834	0,245	67
CM-G 80-650/A/BAQE/0,75	129	135	118	144	80	160	200	18		513	105	281	360	180	180	M16	689	426	834	0,245	61

CM-G 80 4 POLES - IN-LINE PUMPS

Pumped liquid temperature range: from -10 °C to +140 °C - Maximum ambient temperature: +40 °C

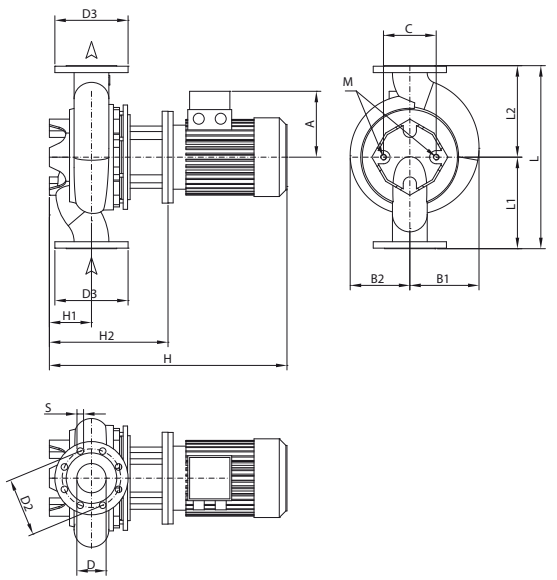

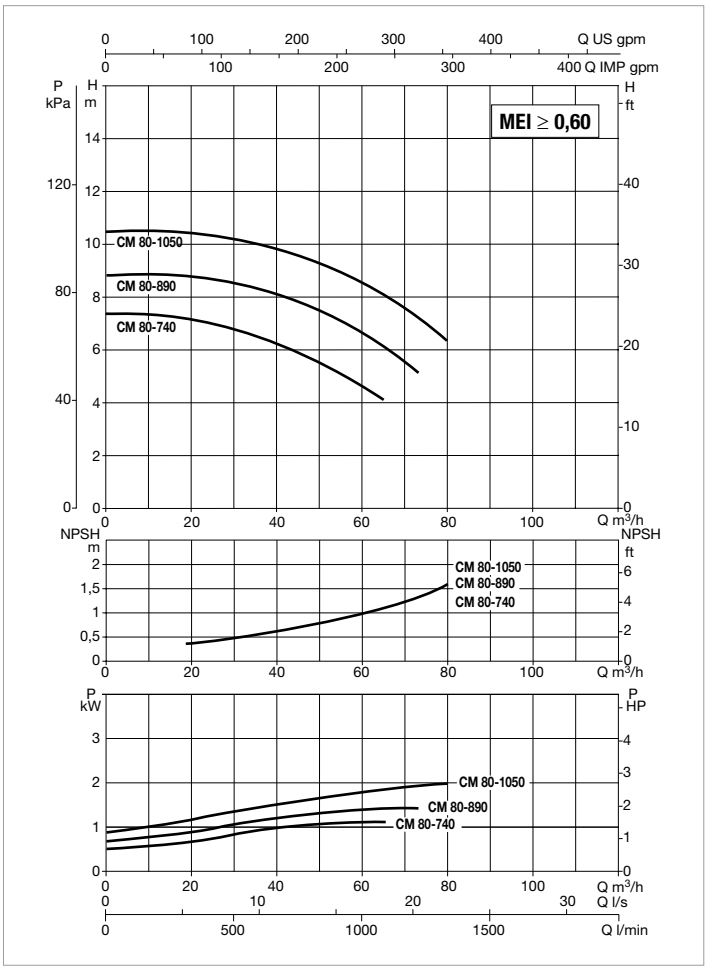

The performance curves are based on kinematic viscosity values = 1 mm^2/s and density equal to 1000 kg/m^3. Curve tolerance according to ISO 9906.

MODEL	CENTRE DISTANCE	PUMP CONNECTIONS	ELECTRICAL DATA									
			POWER INPUT 50 Hz	n r.p.m.	P1 MAX KW	P2 NOMINAL		In A		MOTOR TYPE	MOTOR SIZE	I st. A
						kW	HP	230 V	400 V			
CM-G 80-740/A/BAQE/1,1	440	DN 80	3 x 230 - 400 V ~	1439	1,5	1,1	1,5	4,33	2,5	IE3	MEC 90S	30,7/17,8
CM-G 80-890/A/BAQE/1,5	440	DN 80	3 x 230 - 400 V ~	1430	2	1,5	2	6,24	3,6	IE3	MEC 90L	41,2/23,8
CM-G 80-1050/A/BAQE/2,2	440	DN 80	3 x 230 - 400 V ~	1450	2,4	2,2	3	10,22	5,9	IE3	MEC 100L	60,3/34,8

MODEL	A	B1	B2	C	D	D2	D3	S	no. of holes	H	H1	H2	L	L1	L2	M	PACKING DIMENSIONS			VOL. (m^3)	WEIGHT Kg
																	L/A	L/B	H		
CM-G 80-740/A/BAQE/1,1	138	178	145	144	80	160	200	18	8	563	115	291	440	220	220	M16	689	426	834	0,245	68
CM-G 80-890/A/BAQE/1,5	138	178	145	144	80	160	200	18		598	115	291	440	220	220	M16	689	426	834	0,245	67
CM-G 80-1050/A/BAQE/2,2	145	178	145	144	80	160	200	18		623	115	319	440	220	220	M16	689	426	834	0,245	80

CM-G 80 4 POLES - IN-LINE PUMPS

Pumped liquid temperature range: from -10 °C to +140 °C - Maximum ambient temperature: +40 °C

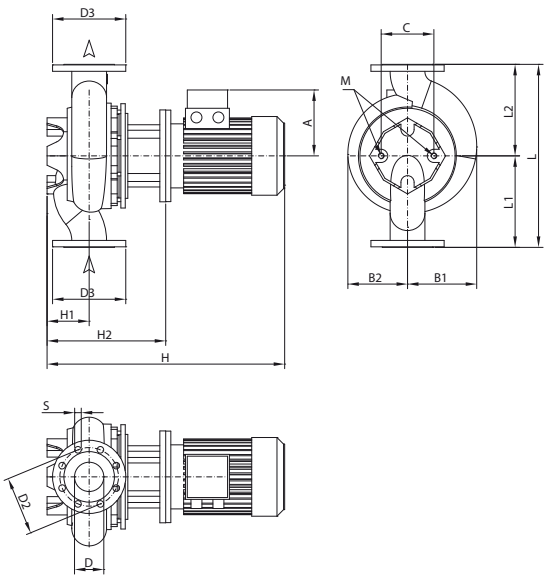

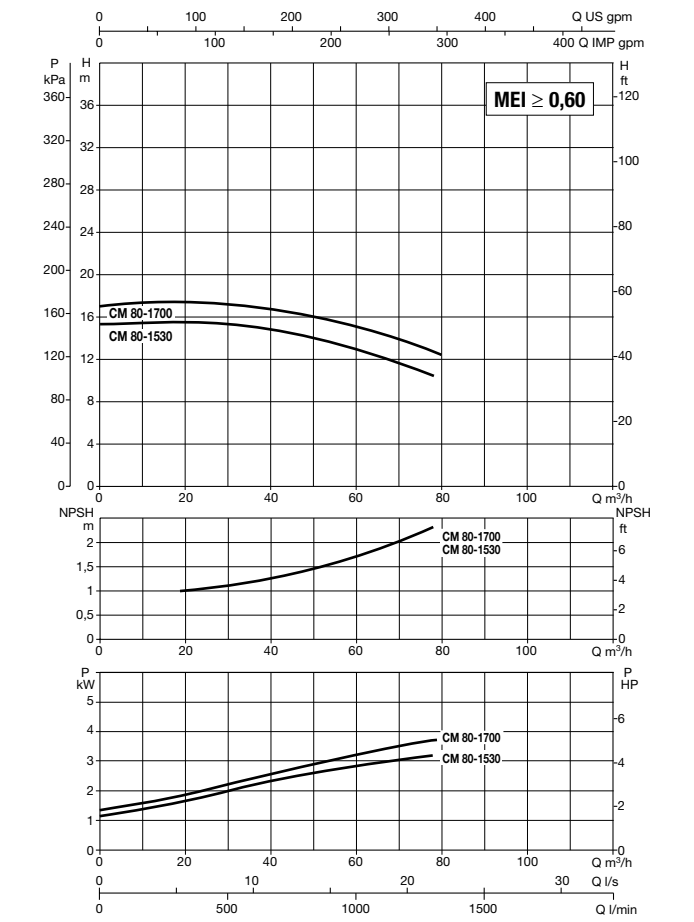

The performance curves are based on kinematic viscosity values = 1 mm^2/s and density equal to 1000 kg/m^3. Curve tolerance according to ISO 9906.

MODEL	CENTRE DISTANCE	PUMP CONNECTIONS	ELECTRICAL DATA									
			POWER INPUT 50 Hz	n r.p.m.	P1 MAX KW	P2 NOMINAL		In A		MOTOR TYPE	MOTOR SIZE	I st. A
						kW	HP	230 V	400 V			
CM-G 80-1530/A/BAQE/3	500	DN 80	3 x 400 V ~ [1]	1441	3,6	3	4	-	6,8	IE3	MEC 100L	55,1
CM-G 80-1700/A/BAQE/4	500	DN 80	3 x 400 V ~ [1]	1452	3,9	4	5,5	-	8,2	IE3	MEC 112M	57,8

[1] star start-up possible (λ)

MODEL	A	B1	B2	C	D	D2	D3	S	no. of holes	H	H1	H2	L	L1	L2	M	PACKING DIMENSIONS			VOL. (m^3)	WEIGHT Kg
																	L/A	L/B	H		
CM-G 80-1530/A/BAQE/3	145	189	164	144	80	160	200	18	8	623	-	644	500	250	250	M16	689	426	834	0,245	81
CM-G 80-1700/A/BAQE/4	161	189	164	144	80	160	200	18		717	-	729	500	250	250	M16	739	626	1107	0,512	98

DAB PUMPS reserves the right to make modifications without notice.

CM-G 80 4 POLES - IN-LINE PUMPS

Pumped liquid temperature range: from -10 °C to +140 °C - Maximum ambient temperature: +40 °C

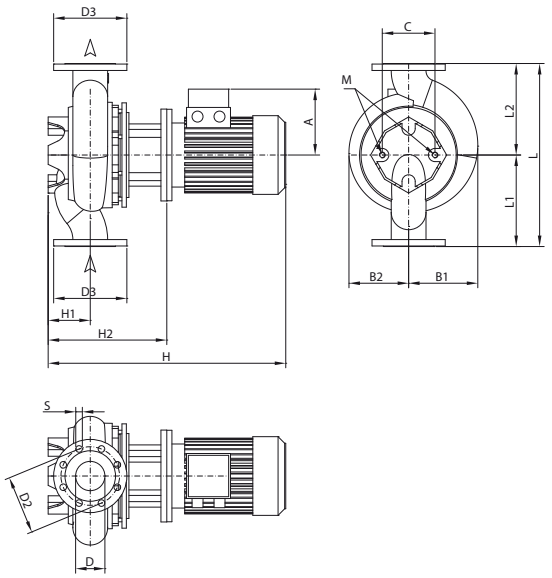

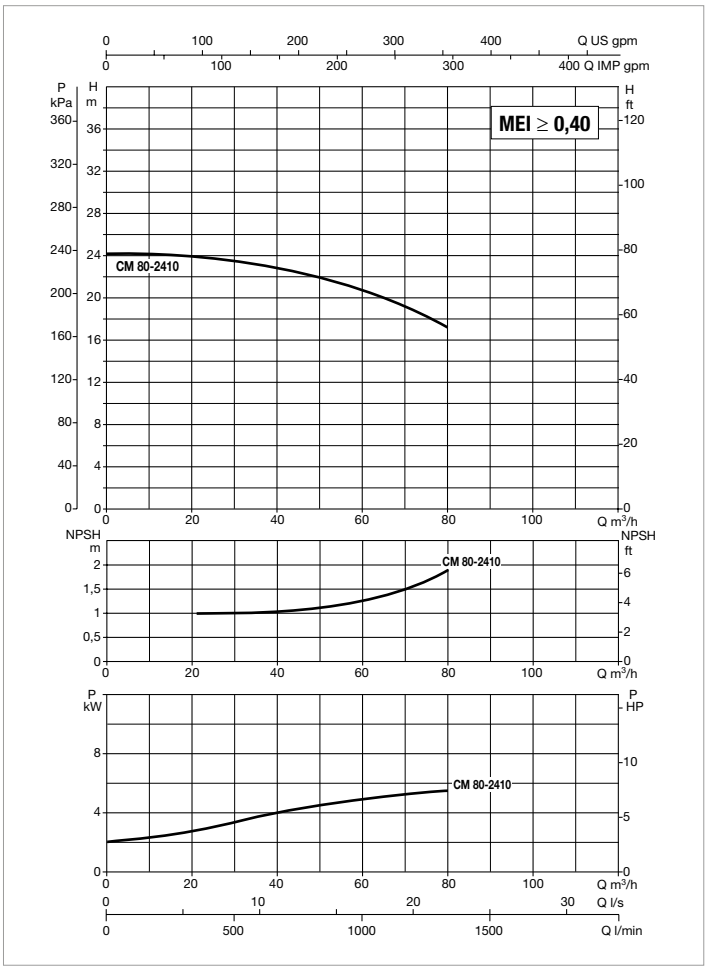

The performance curves are based on kinematic viscosity values = 1 mm^2/s and density equal to 1000 kg/m^3. Curve tolerance according to ISO 9906.

MODEL	CENTRE DISTANCE	PUMP CONNECTIONS	ELECTRICAL DATA								
			POWER INPUT 50 Hz	n r.p.m.	P1 MAX KW	P2 NOMINAL		In A	MOTOR TYPE	MOTOR SIZE	I st. A
						kW	HP	400 V			
CM-G 80-2410/A/BAQE/5,5	620	DN 80	3 x 400 V ~ [1]	1461	6,5	5,5	7,5	10,6	IE3	MEC 132S	92,2

[1] star start-up possible (λ)

MODEL	A	B1	B2	C	D	D2	D3	S	no. of holes	H	H1	H2	L	L1	L2	M	PACKING DIMENSIONS			VOL. (m^3)	WEIGHT Kg
																	L/A	L/B	H		
CM-G 80-2410/A/BAQE/5,5	195	245	224	230	80	160	200	18	8	775	140	413	620	310	310	M16	739	626	1107	0,512	204

CM-G 80 4 POLES - IN-LINE PUMPS

Pumped liquid temperature range: from -10 °C to +140 °C - Maximum ambient temperature: +40 °C

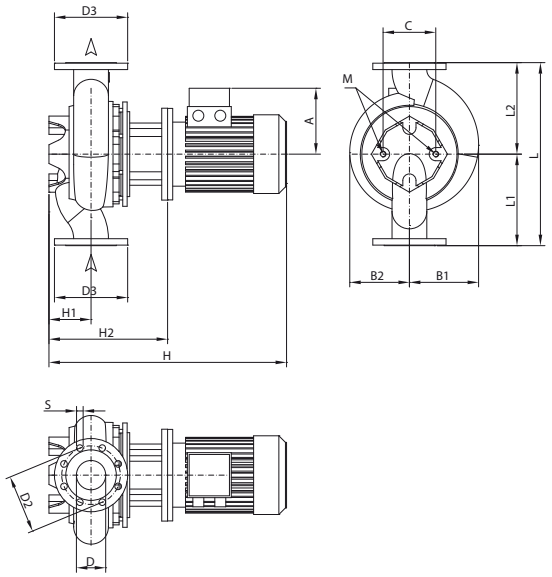

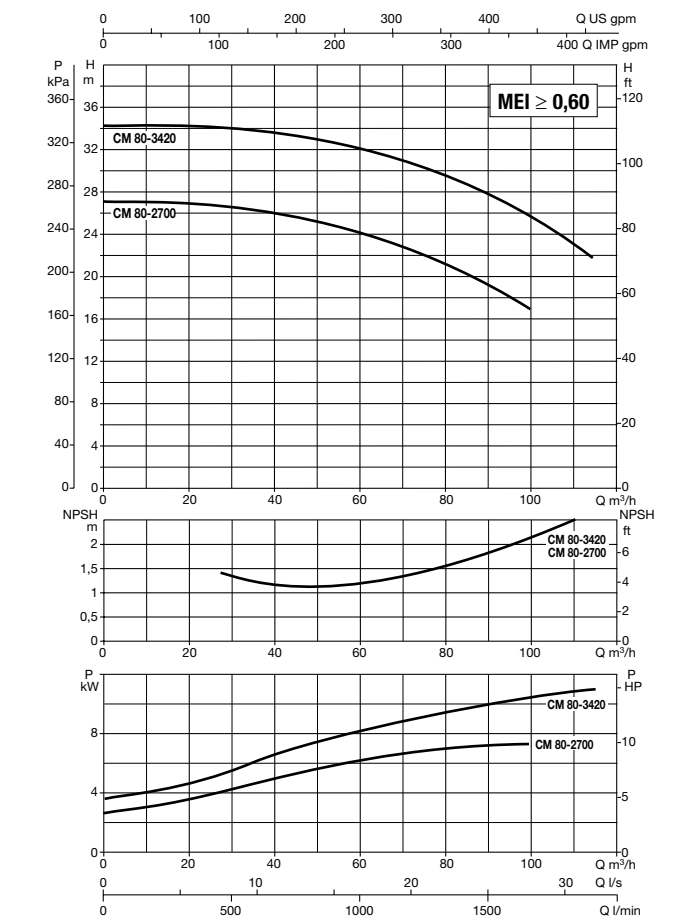

The performance curves are based on kinematic viscosity values = 1 mm^2/s and density equal to 1000 kg/m^3. Curve tolerance according to ISO 9906.

MODEL	CENTRE DISTANCE	PUMP CONNECTIONS	ELECTRICAL DATA								
			POWER INPUT 50 Hz	n r.p.m.	P1 MAX KW	P2 NOMINAL		In A	MOTOR TYPE	MOTOR SIZE	I st. A
						kW	HP	400 V			
CM-G 80-2700/A/BAQE/7,5	620	DN 80	3 x 400 V ~ [1]	1463	8,7	7,5	10	14,4	IE3	MEC 132M	124,1
CM-G 80-3420/A/BAQE/11	620	DN 80	3 x 400 V ~ [1]	1472	12,7	11	15	22,4	IE3	MEC 160M	172,2

[1] star start-up possible (λ)

MODEL	A	B1	B2	C	D	D2	D3	S	no. of holes	H	H1	H2	L	L1	L2	M	PACKING DIMENSIONS			VOL. (m^3)	WEIGHT Kg
																	L/A	L/B	H		
CM-G 80-2700/A/BAQE/7,5	188	245	224	230	80	160	200	18	8	850	140	413	620	310	310	M16	739	626	1107	0,512	187
CM-G 80-3420/A/BAQE/11	249	245	224	230	80	160	200	18		948	140	413	620	310	310	M16	1200	720	758	0,655	277

DAB PUMPS reserves the right to make modifications without notice.

CM-G 100 4 POLES - IN-LINE PUMPS

Pumped liquid temperature range: from -10 °C to +140 °C - Maximum ambient temperature: +40 °C

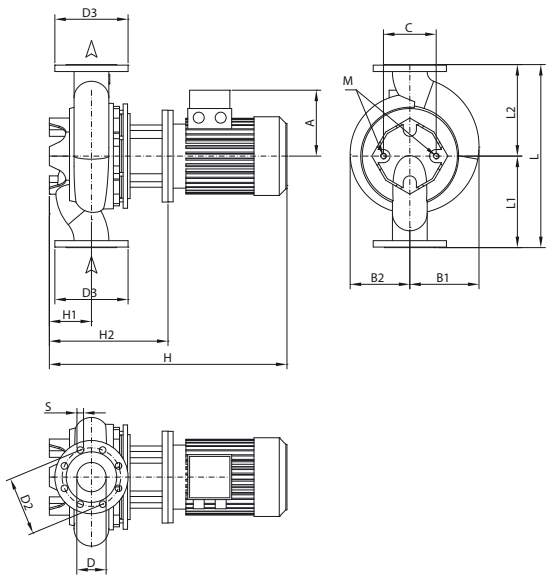

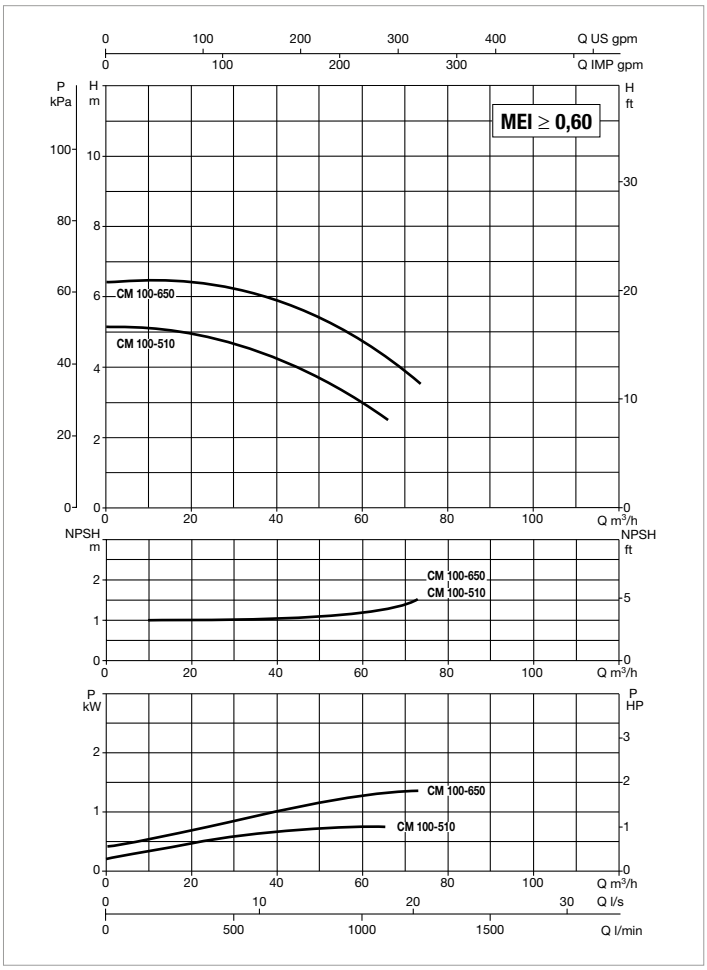

The performance curves are based on kinematic viscosity values = 1 mm^2/s and density equal to 1000 kg/m^3. Curve tolerance according to ISO 9906.

MODEL	CENTRE DISTANCE	PUMP CONNECTIONS	ELECTRICAL DATA									
			POWER INPUT 50 Hz	n r.p.m.	P1 MAX KW	P2 NOMINAL		In A		MOTOR TYPE	MOTOR SIZE	I st. A
						kW	HP	230 V	400 V			
CM-G 100-510/A/BAQE/0,75	500	DN 100	3 x 230 - 400 V ~	1430	1,2	0,75	1	3,12	1,8	IE3	MEC 80M	17,2/9,9
CM-G 100-650/A/BAQE/1,1	500	DN 100	3 x 230 - 400 V ~	1440	1,4	1,1	1,5	4,33	2,5	IE3	MEC 90S	30,7/17,8

MODEL	A	B1	B2	C	D	D2	D3	S	no. of holes	H	H1	H2	L	L1	L2	M	PACKING DIMENSIONS			VOL. (m^3)	WEIGHT Kg
																	L/A	L/B	H		
CM-G 100-510/A/BAQE/0,75	129	158	125	158	125	180	220	18	8	550	140	318	500	250	250	M16	689	426	834	0,245	78
CM-G 100-650/A/BAQE/1,1	138	158	125	158	125	180	220	18		585	140	318	500	250	250	M16	689	426	834	0,245	78

CM-G 100 4 POLES - IN-LINE PUMPS

Pumped liquid temperature range: from -10 °C to +140 °C - Maximum ambient temperature: +40 °C

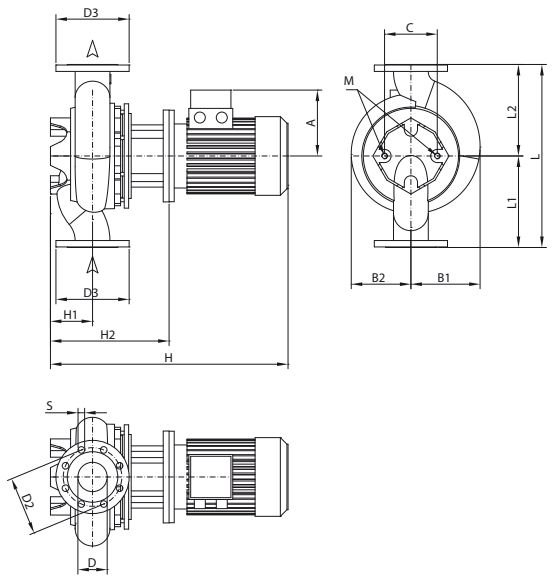

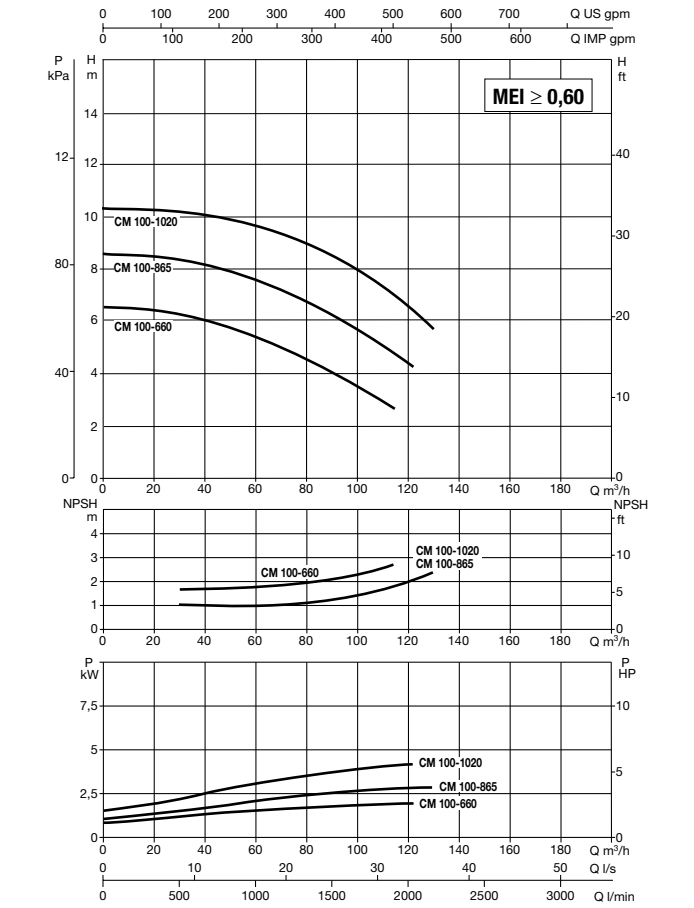

The performance curves are based on kinematic viscosity values = 1 mm^2/s and density equal to 1000 kg/m^3. Curve tolerance according to ISO 9906.

MODEL	CENTRE DISTANCE	PUMP CONNECTIONS	ELECTRICAL DATA									
			POWER INPUT 50 Hz	n r.p.m.	P1 MAX KW	P2 NOMINAL		In A		MOTOR TYPE	MOTOR SIZE	I st. A
						kW	HP	230 V	400 V			
CM-G 100-660/A/BAQE/1,5	550	DN 100	3 x 230 - 400 V ~	1430	2	1,5	2	6,24	3,6	IE3	MEC 90L	41,2/23,8
CM-G 100-865/A/BAQE/2,2	550	DN 100	3 x 230 - 400 V ~	1455	3	2,2	3	10,22	5,9	IE3	MEC 90L	60,3/34,8
CM-G 100-1020/A/BAQE/3	550	DN 100	3 x 400 V ~ [1]	1441	3,6	3	4	-	6,8	IE3	MEC 100L	55,1

[1] star start-up possible (λ)

MODEL	A	B1	B2	C	D	D2	D3	S	no. of holes	H	H1	H2	L	L1	L2	M	PACKING DIMENSIONS			VOL. (m^3)	WEIGHT Kg
																	L/A	L/B	H		
CM-G 100-660/A/BAQE/2,5	138	192	152	230	100	180	220	18	8	620	140	313	550	275	275	M16	689	426	834	0,245	95
CM-G 100-865/A/BAQE/2,2	145	192	152	230	100	180	220	18		645	140	341	550	275	275	M16	689	426	834	0,245	108
CM-G 100-1020/A/BAQE/3	145	192	152	230	100	180	220	18		645	140	341	550	275	275	M16	689	426	834	0,245	102

DAB PUMPS reserves the right to make modifications without notice.

CM-G 100 4 POLES - IN-LINE PUMPS

Pumped liquid temperature range: from -10 °C to +140 °C - Maximum ambient temperature: +40 °C

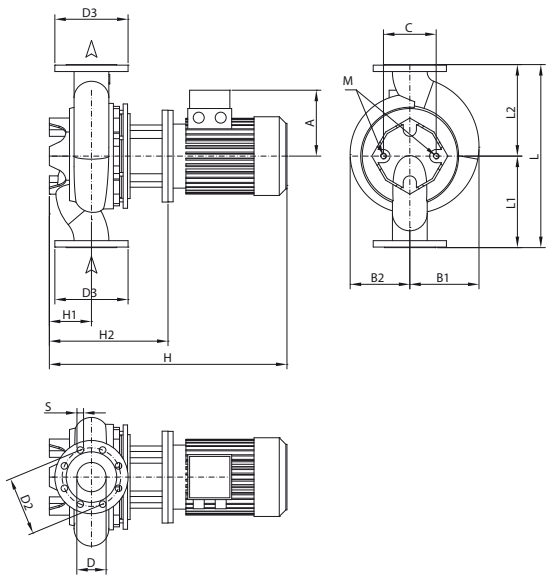

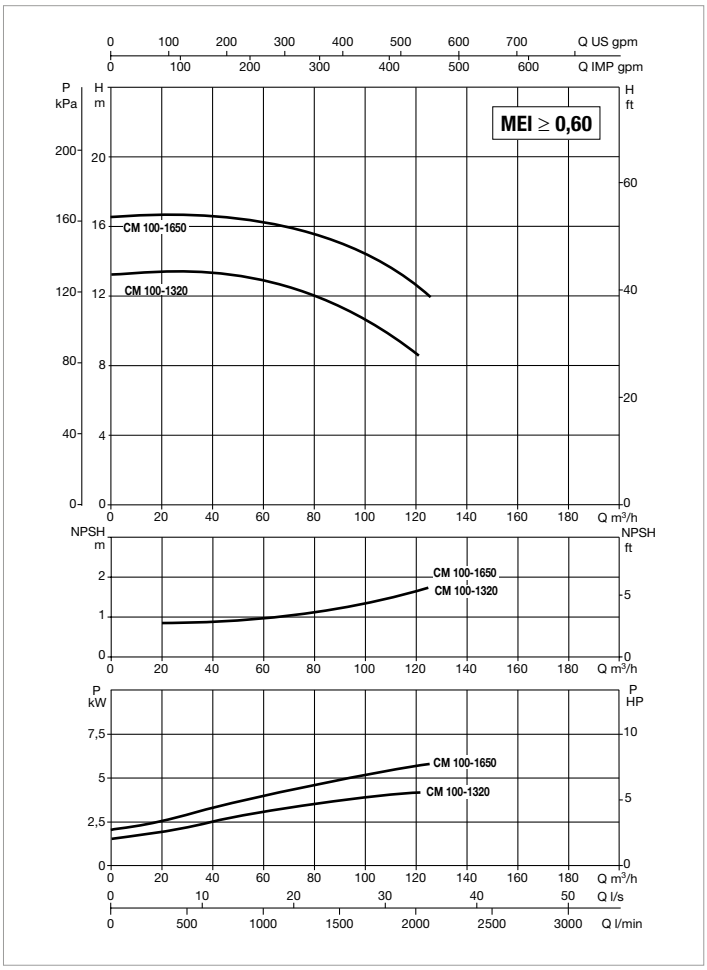

The performance curves are based on kinematic viscosity values = 1 mm^2/s and density equal to 1000 kg/m^3. Curve tolerance according to ISO 9906.

MODEL	CENTRE DISTANCE	PUMP CONNECTIONS	ELECTRICAL DATA								
			POWER INPUT 50 Hz	n r.p.m.	P1 MAX KW	P2 NOMINAL		In A	MOTOR TYPE	MOTOR SIZE	I st. A
						kW	HP	400 V			
CM-G 100-1320/A/BAQE/4	550	DN 100	3 x 400 V ~ [1]	1450	4,6	4	5,5	8,2	IE3	MEC 112M	57,8
CM-G 100-1650/A/BAQE/5,5	550	DN 100	3 x 400 V ~ [1]	1464	6,9	5,5	7,5	10,6	IE3	MEC 132S	92,2

[1] star start-up possible (λ)

MODEL	A	B1	B2	C	D	D2	D3	S	no. of holes	H	H1	H2	L	L1	L2	M	PACKING DIMENSIONS			VOL. (m^3)	WEIGHT Kg
																	L/A	L/B	H		
CM-G 100-1320/A/BAQE/4	161	204	174	230	100	180	220	18	8	799	140	341	550	275	275	M16	739	626	1107	0,512	137
CM-G 100-1650/A/BAQE/5,5	195	204	174	230	100	180	220	18		779	140	417	550	275	275	M16	739	626	1107	0,512	182

CM-G 100 4 POLES - IN-LINE PUMPS

Pumped liquid temperature range: from -10 °C to +140 °C - Maximum ambient temperature: +40 °C

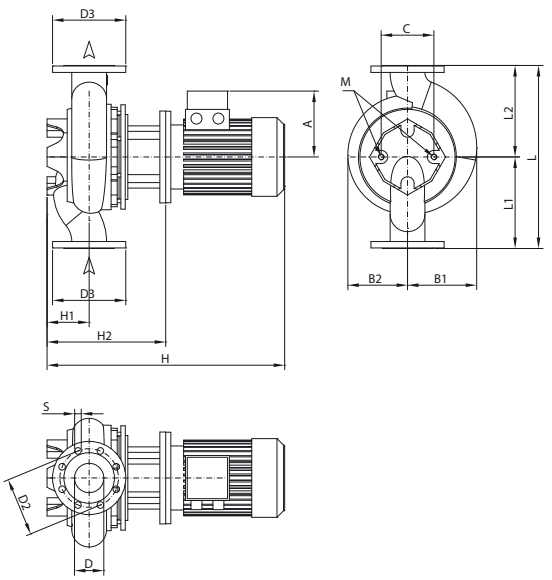

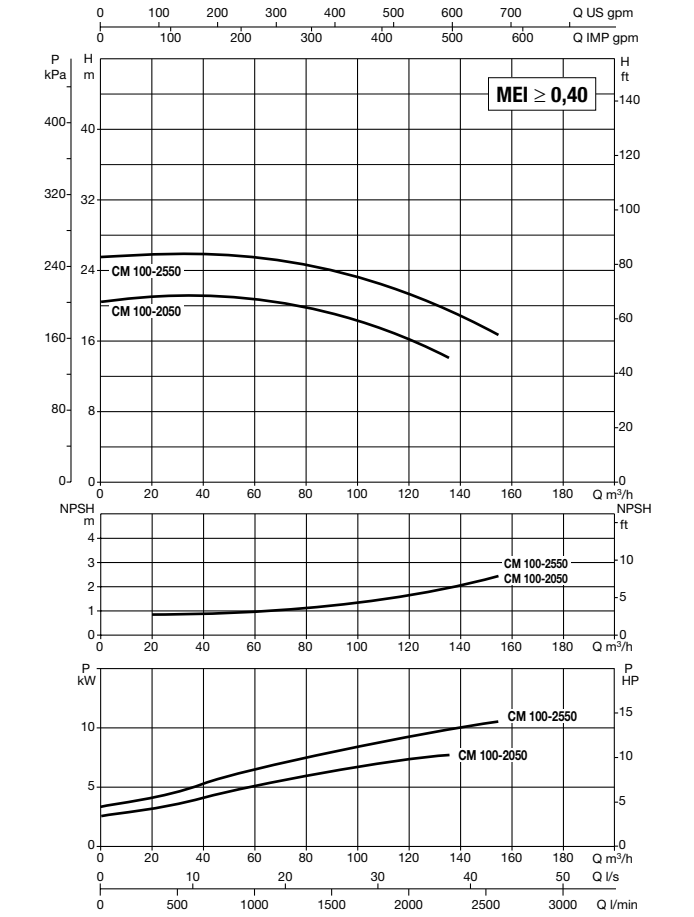

The performance curves are based on kinematic viscosity values = 1 mm^2/s and density equal to 1000 kg/m^3. Curve tolerance according to ISO 9906.

MODEL	CENTRE DISTANCE	PUMP CONNECTIONS	ELECTRICAL DATA								
			POWER INPUT 50 Hz	n r.p.m.	P1 MAX KW	P2 NOMINAL		In A	MOTOR TYPE	MOTOR SIZE	I st. A
						kW	HP	400 V			
CM-G 100-2050/A/BAQE/7,5	670	DN 100	3 x 400 V ~ [1]	1461	8,5	7,5	10	14,4	IE3	MEC 132M	124,1
CM-G 100-2550/A/BAQE/11	670	DN 100	3 x 400 V ~ [1]	1470	12,1	11	15	22,4	IE3	MEC 160M	172,2

[1] star start-up possible (⅄)

MODEL	A	B1	B2	C	D	D2	D3	S	no. of holes	H	H1	H2	L	L1	L2	M	PACKING DIMENSIONS			VOL. (m^3)	WEIGHT Kg
																	L/A	L/B	H		
CM-G 100-2050/A/BAQE/7,5	188	293	253	230	100	180	220	18	8	890	175	453	670	335	335	M16	739	626	1107	0,512	230
CM-G 100-2550/A/BAQE/11	249	293	253	230	100	180	220	18		988	175	483	670	335	335	M16	1200	720	758	0,655	323

DAB PUMPS reserves the right to make modifications without notice.

CM-G 100 4 POLES - IN-LINE PUMPS

Pumped liquid temperature range: from -10 °C to +140 °C - Maximum ambient temperature: +40 °C

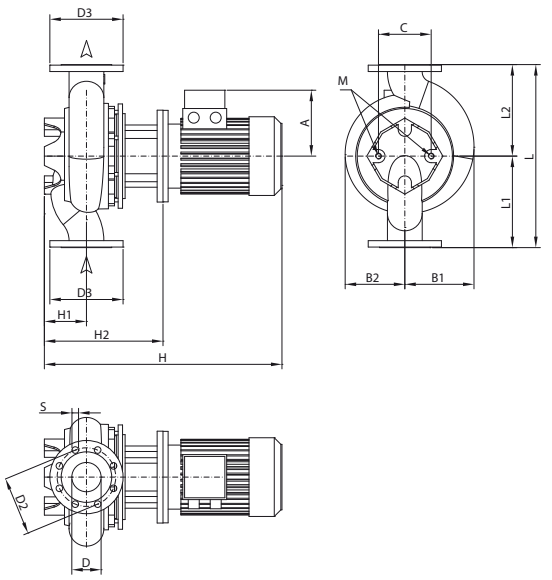

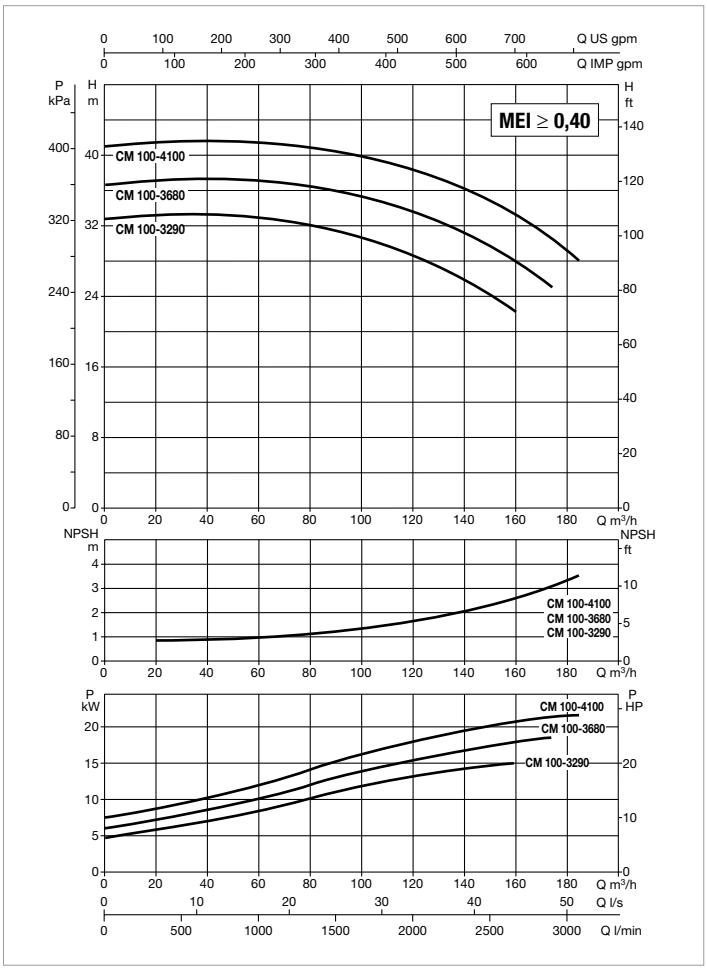

The performance curves are based on kinematic viscosity values = 1 mm^2/s and density equal to 1000 kg/m^3. Curve tolerance according to ISO 9906.

MODEL	CENTRE DISTANCE	PUMP CONNECTIONS	ELECTRICAL DATA								
			POWER INPUT 50 Hz	n r.p.m.	P1 MAX KW	P2 NOMINAL		In A	MOTOR TYPE	MOTOR SIZE	I st. A
						kW	HP	400 V			
CM-G 100-3290/A/BAQE/15	670	DN 100	3 x 400 V ~ [1]	1471	17,1	15	20	30,5	IE3	MEC 160L	232,4
CM-G 100-3680/A/BAQE/18,5	670	DN 100	3 x 400 V ~ [1]	1470	19,6	18,5	25	34,3	IE3	MEC 180M	268,6
CM-G 100-4100/A/BAQE/22	670	DN 100	3 x 400 V ~ [1]	1470	22,4	22	30	40,2	IE3	MEC 180L	336,1

[1] star start-up possible (λ)

MODEL	A	B1	B2	C	D	D2	D3	S	no. of holes	H	H1	H2	L	L1	L2	M	PACKING DIMENSIONS			VOL. (m^3)	WEIGHT Kg
																	L/A	L/B	H		
CM-G 100-3290/A/BAQE/15	249	293	253	230	100	180	220	18	8	1031	175	483	670	335	335	M16	1200	720	758	0,655	333
CM-G 100-3680/A/BAQE/18,5	265	293	253	230	100	180	220	18		1063	175	483	670	335	335	M16	1200	720	758	0,655	359
CM-G 100-4100/A/BAQE/22	265	293	253	230	100	180	220	18		1101	175	483	670	335	335	M16	1200	720	758	0,655	370

CM-G 125 4 POLES - IN-LINE PUMPS

Pumped liquid temperature range: from -10 °C to +140 °C - Maximum ambient temperature: +40 °C

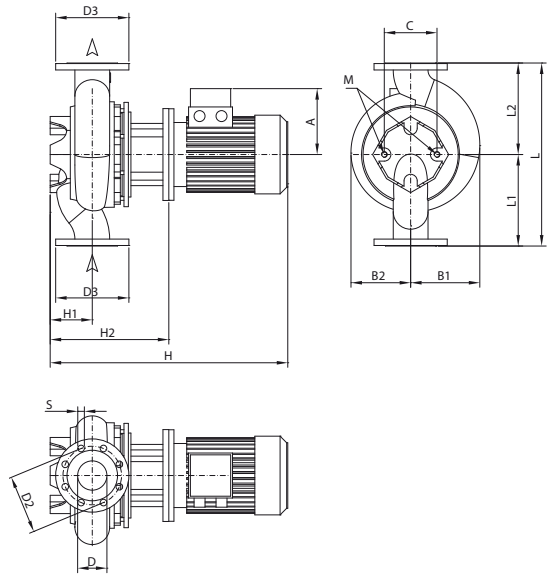

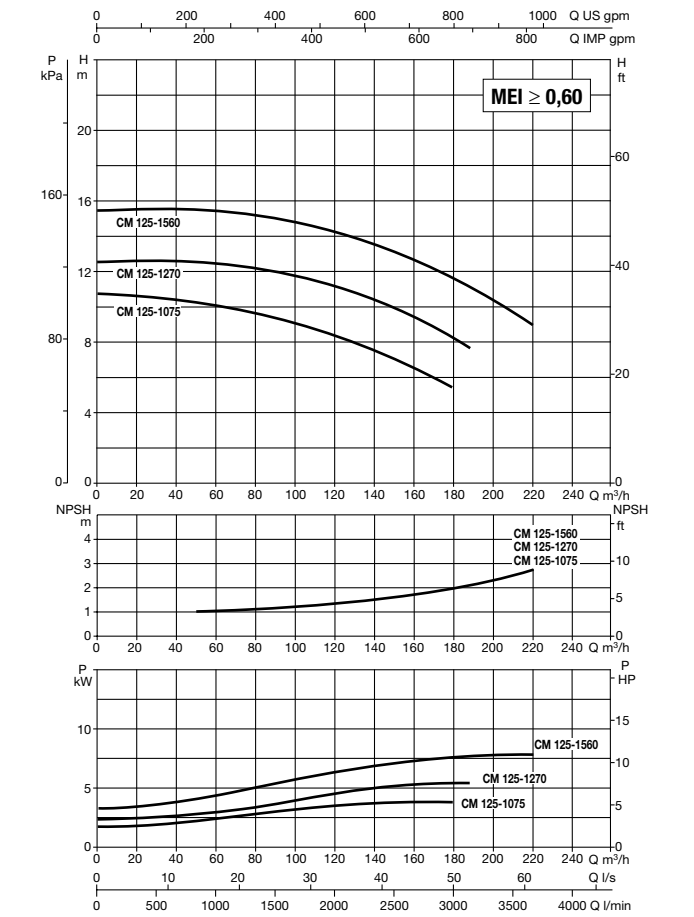

The performance curves are based on kinematic viscosity values = 1 mm^2/s and density equal to 1000 kg/m^3. Curve tolerance according to ISO 9906.

MODEL	CENTRE DISTANCE	PUMP CONNECTIONS	ELECTRICAL DATA								
			POWER INPUT 50 Hz	n r.p.m.	P1 MAX KW	P2 NOMINAL		In A	MOTOR TYPE	MOTOR SIZE	I st. A
						kW	HP	400 V			
CM-G 125-1075/A/BAQE/4	620	DN 125	3 x 400 V ~ [1]	1455	5,1	4	5,5	8,2	IE3	MEC 112M	57,8
CM-G 125-1270/A/BAQE/5,5	620	DN 125	3 x 400 V ~ [1]	1465	7,2	5,5	7,5	10,6	IE3	MEC 132S	92,2
CM-G 125-1560/A/BAQE/7,5	620	DN 125	3 x 400 V ~ [1]	1469	9,5	7,5	10	14,4	IE3	MEC 132M	124,1

[1] star start-up possible (λ)

MODEL	A	B1	B2	C	D	D2	D3	S	no. of holes	H	H1	H2	L	L1	L2	M	PACKING DIMENSIONS			VOL. (m^3)	WEIGHT Kg
																	L/A	L/B	H		
CM-G 125-1075/A/BAQE/4	161	252	204	230	125	210	250	18	8	880	215	482	620	310	310	M16	739	626	1107	0,512	191
CM-G 125-1270/A/BAQE/5,5	195	252	204	230	125	210	250	18		860	215	498	620	310	310	M16	739	626	1107	0,512	237
CM-G 125-1560/A/BAQE/7,5	188	252	204	230	125	210	250	18		935	215	498	620	310	310	M16	739	626	1107	0,512	218

CM-G 125 4 POLES - IN-LINE PUMPS

Pumped liquid temperature range: from -10 °C to +140 °C - Maximum ambient temperature: +40 °C

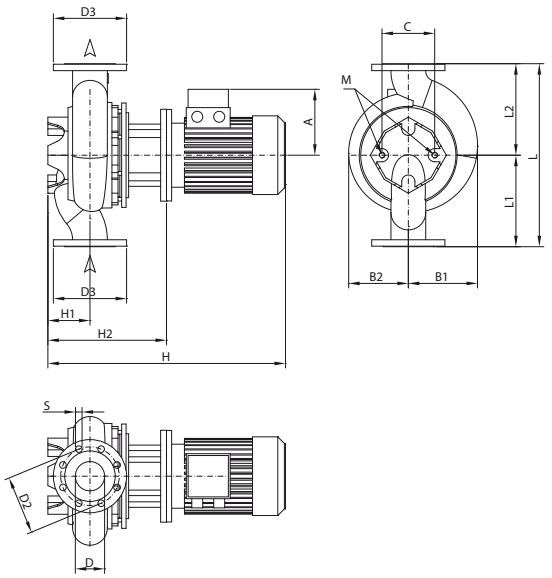

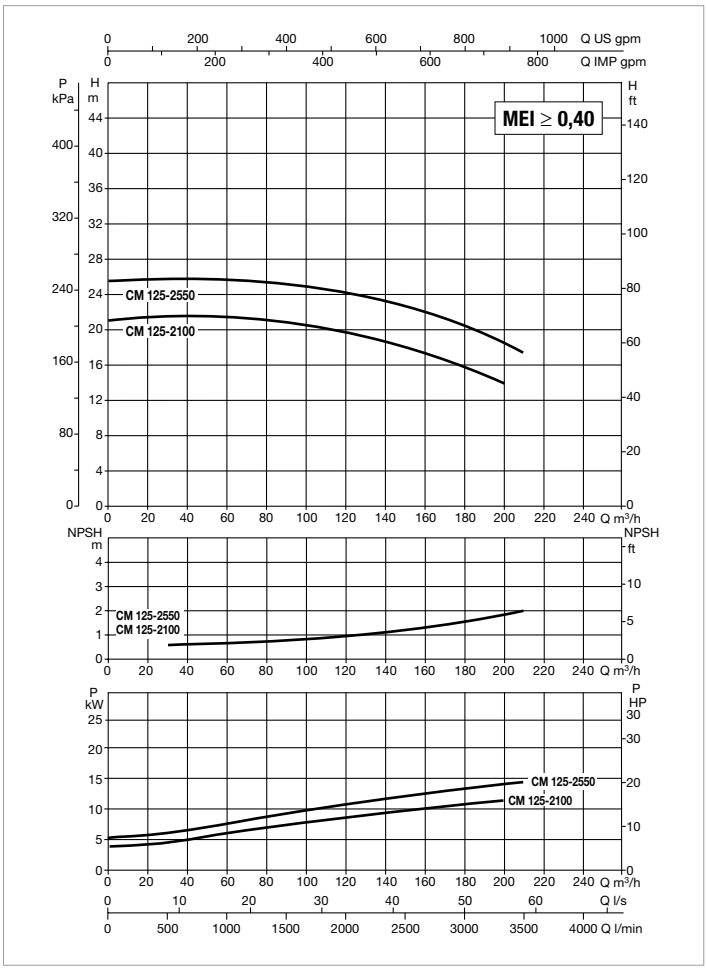

The performance curves are based on kinematic viscosity values = 1 mm^2/s and density equal to 1000 kg/m^3. Curve tolerance according to ISO 9906.

MODEL	CENTRE DISTANCE	PUMP CONNECTIONS	ELECTRICAL DATA								
			POWER INPUT 50 Hz	n r.p.m.	P1 MAX KW	P2 NOMINAL		In A	MOTOR TYPE	MOTOR SIZE	I st. A
						kW	HP	400 V			
CM-G 125-2100/A/BAQE/11	800	DN 125	3 x 400 V ~ [1]	1475	13,6	11	15	22,4	IE3	MEC 160M	172,2
CM-G 125-2550/A/BAQE/15	800	DN 125	3 x 400 V ~ [1]	1470	16,3	15	20	30,5	IE3	MEC 160L	232,4

[1] star start-up possible (λ)

MODEL	A	B1	B2	C	D	D2	D3	S	no. of holes	H	H1	H2	L	L1	L2	M	PACKING DIMENSIONS			VOL. (m^3)	WEIGHT Kg
																	L/A	L/B	H		
CM-G 125-2100/A/BAQE/11	249	273	245	230	125	210	250	18	8	1038	215	533	800	400	400	M16	1440	1040	676	1,012	311
CM-G 125-2550/A/BAQE/15	249	273	245	230	125	210	250	18		1081	215	533	800	400	400	M16	1440	1040	676	1,012	321

CM-G 125 4 POLES- IN-LINE PUMPS

Pumped liquid temperature range: from -10 °C to +140 °C - Maximum ambient temperature: +40 °C

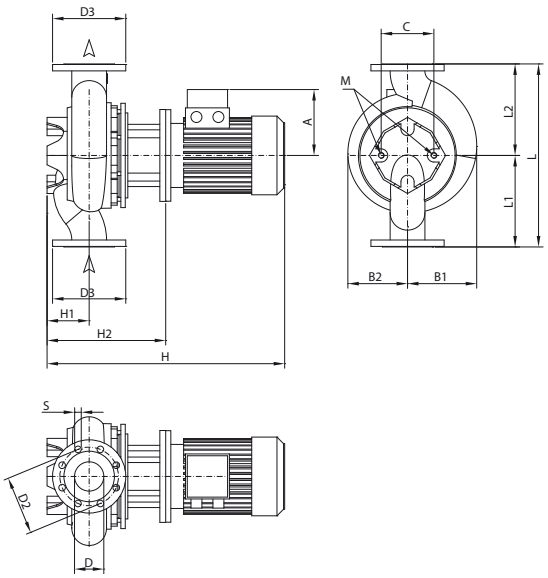

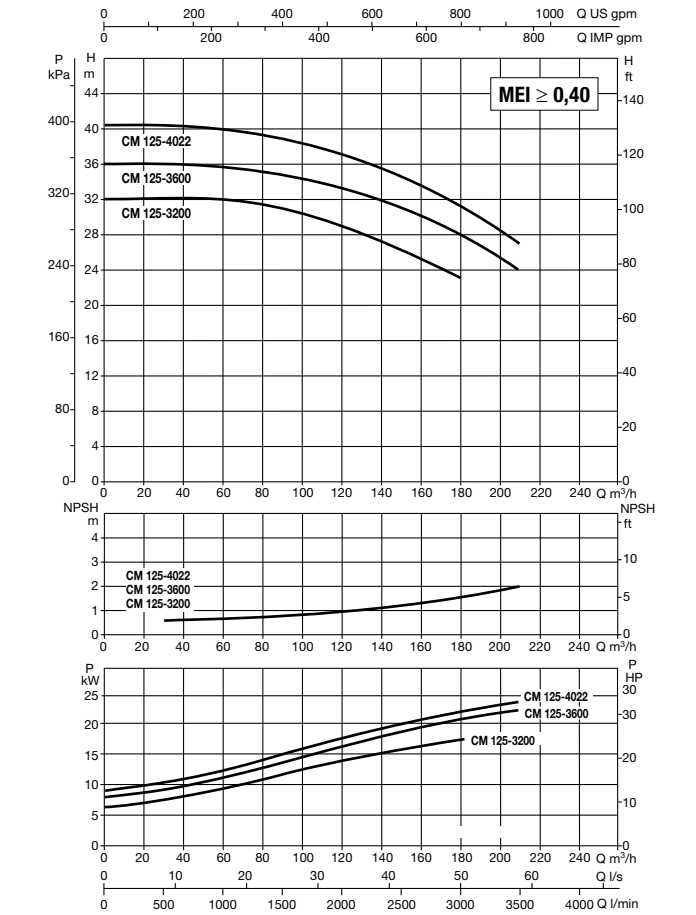

The performance curves are based on kinematic viscosity values = 1 mm^2/s and density equal to 1000 kg/m^3. Curve tolerance according to ISO 9906.

MODEL	CENTRE DISTANCE	PUMP CONNECTIONS	ELECTRICAL DATA								
			POWER INPUT 50 Hz	n r.p.m.	P1 MAX KW	P2 NOMINAL		In A	MOTOR TYPE	MOTOR SIZE	I st. A
						kW	HP	400 V			
CM-G 125-3200/A/BAQE/18,5	800	DN 125	3 x 400 V ~ [1]	1471	17,9	18,5	25	34,3	IE3	MEC 180M	268,6
CM-G 125-3600/A/BAQE/22	800	DN 125	3 x 400 V ~ [1]	1470	22,4	22	30	40,2	IE3	MEC 180L	336,1
CM-G 125-4022/A/BAQE/30	800	DN 125	3 x 400 V ~ [1]	1478	26,5	30	40	53,7	IE3	MEC 200L	460,1

[1] star start-up possible (λ)

MODEL	A	B1	B2	C	D	D2	D3	S	no. of holes	H	H1	H2	L	L1	L2	M	PACKING DIMENSIONS			VOL. (m^3)	WEIGHT Kg
																	L/A	L/B	H		
CM-G 125-3200/A/BAQE/18,5	265	273	245	230	125	210	250	18	8	1113	215	533	800	400	400	M16	1440	1040	676	1,012	346
CM-G 125-3600/A/BAQE/22	265	273	245	230	125	210	250	18		1151	215	533	800	400	400	M16	1440	1040	676	1,012	357
CM-G 125-4022/A/BAQE/30	292	273	245	230	125	210	250	18		1203	215	533	800	400	400	M16	1440	1040	676	1,012	453

DAB PUMPS reserves the right to make modifications without notice.

CM-G 150 4 POLES - IN-LINE PUMPS

Pumped liquid temperature range: from -10 °C to +140 °C - Maximum ambient temperature: +40 °C

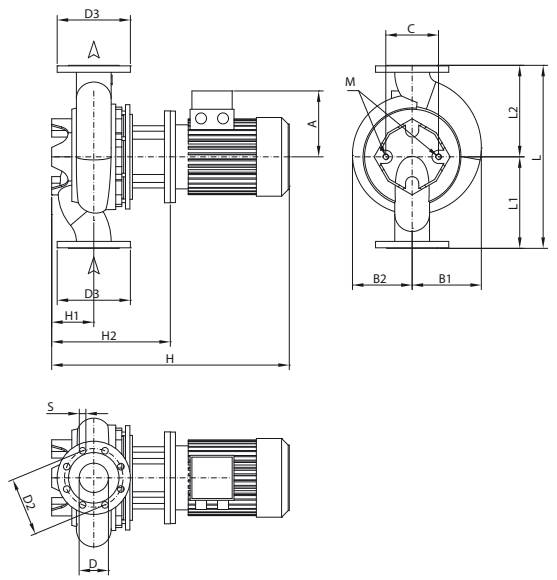

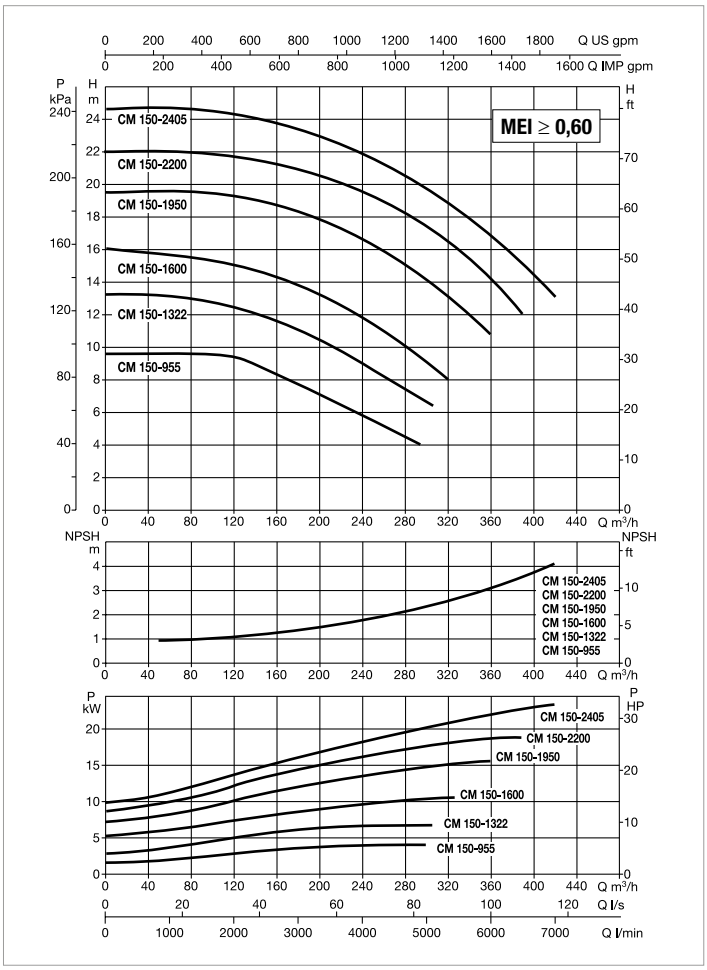

The performance curves are based on kinematic viscosity values = 1 mm^2/s and density equal to 1000 kg/m^3. Curve tolerance according to ISO 9906.

MODEL	CENTRE DISTANCE	PUMP CONNECTIONS	ELECTRICAL DATA								
			POWER INPUT 50 Hz	n r.p.m.	P1 MAX KW	P2 NOMINAL		In A	MOTOR TYPE	MOTOR SIZE	I st. A
						kW	HP	400 V			
CM-G 150-955/A/BAQE/5,5	800	DN 150	3 x 400 V ~ [1]	1462	7,5	5,5	7,5	10,6	IE3	MEC 132S	92,2
CM-G 150-1322/A/BAQE/7,5	800	DN 150	3 x 400 V ~ [1]	1464	8,9	7,5	10	14,4	IE3	MEC 132M	124,1
CM-G 150-1600/A/BAQE/11	800	DN 150	3 x 400 V ~ [1]	1473	13	11	15	22,4	IE3	MEC 160M	172,2
CM-G 150-1950/A/BAQE/15	800	DN 150	3 x 400 V ~ [1]	1472	17,5	15	20	30,5	IE3	MEC 160L	232,4
CM-G 150-2200/A/BAQE/18,5	800	DN 150	3 x 400 V ~ [1]	1472	21,1	18,5	25	34,3	IE3	MEC 180M	268,6
CM-G 150-2405/A/BAQE/22	800	DN 150	3 x 400 V ~ [1]	1470	23,8	22	30	40,2	IE3	MEC 180L	336,1

[1] star start-up possible (λ)

MODEL	A	B1	B2	C	D	D2	D3	S	no. of holes	H	H1	H2	L	L1	L2	M	PACKING DIMENSIONS			VOL. (m^3)	WEIGHT Kg
																	L/A	L/B	H		
CM-G 150-955/A/BAQE/5,5	195	298	239	230	150	240	285	22	8	869	215	507	800	400	400	M16	934	584	1335	0,728	298
CM-G 150-1322/A/BAQE/7,5	188	298	239	230	150	240	285	22		944	215	507	800	400	400	M16	934	584	1335	0,728	279
CM-G 150-1600/A/BAQE/11	249	298	239	230	150	240	285	22		1042	215	537	800	400	400	M16	1440	1040	676	1,012	327
CM-G 150-1950/A/BAQE/15	249	298	239	230	150	240	285	22		1085	215	537	800	400	400	M16	1440	1040	676	1,012	337
CM-G 150-2200/A/BAQE/18,5	265	298	239	230	150	240	285	22		1117	215	537	800	400	400	M16	1440	1040	676	1,012	361
CM-G 150-2405/A/BAQE/22	265	298	239	230	150	240	285	22		1155	215	537	800	400	400	M16	1440	1040	676	1,012	373

DAB PUMPS reserves the right to make modifications without notice.

DCM 40 4 POLES - IN-LINE PUMPS

Pumped liquid temperature range: from -10 °C to +130 °C - Maximum ambient temperature: +40 °C

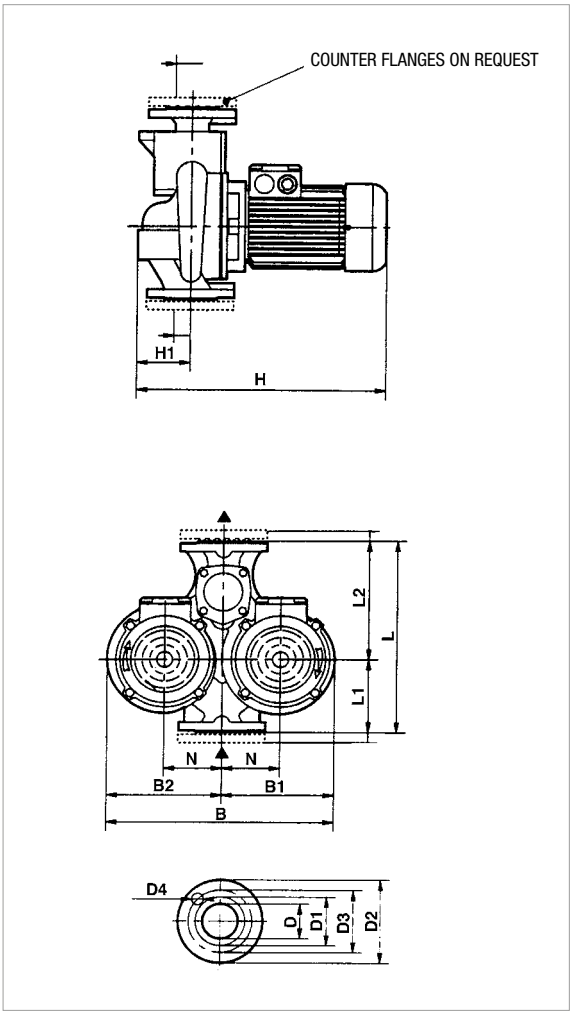

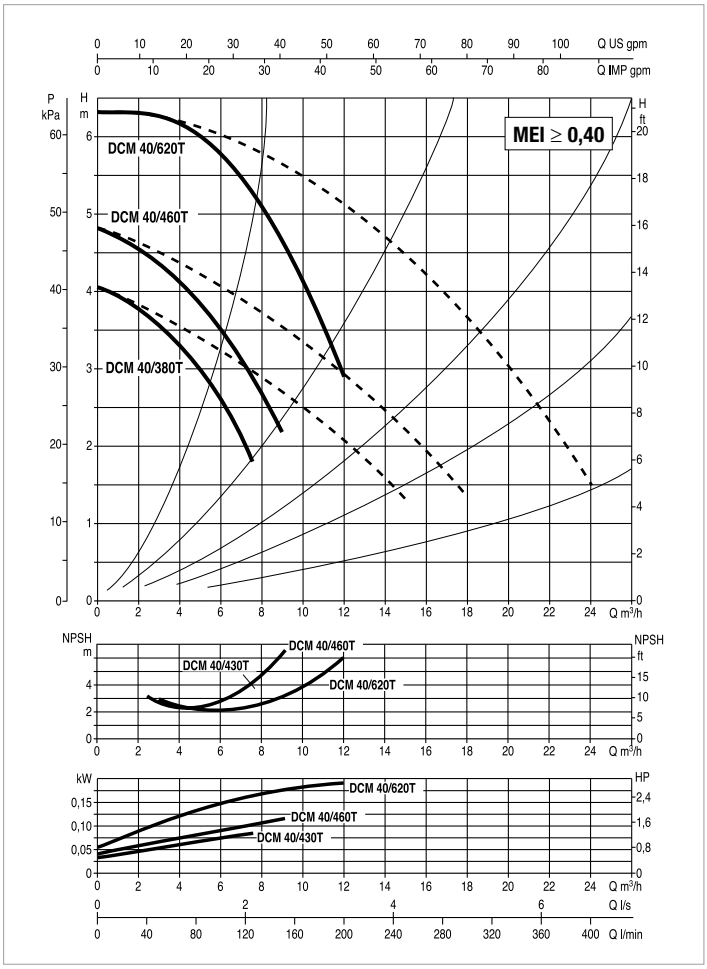

The performance curves are based on kinematic viscosity values = 1 mm^2/s and density equal to 1000 kg/m^3. Curve tolerance according to ISO 9906.

MODEL	CENTRE DISTANCE	PUMP CONNECTIONS	ELECTRICAL DATA							
			POWER INPUT 50 Hz	n r.p.m.	P1 MAX KW	P2 NOMINAL		In A		MOTOR TYPE
						kW	HP	230	400	
DCM 40/380 T	340	DN 40	3x230-400 V ~	1450	0,41	0,25	0,33	1,6	0,9	-
DCM 40/460 T	340	DN 40	3x230-400 V ~	1450	0,41	0,25	0,33	1,6	0,9	-
DCM 40/620 T	340	DN 40	3x230-400 V ~	1450	0,41	0,25	0,33	1,6	0,9	-

MODEL	B	B1	B2	D	D1	D2	D3	D4 no. of holes	H	H1	L	L1	L2	N	PACKING DIMENSIONS			VOLUME (m^3)	WEIGHT Kg
															L/A	L/B	H		
DCM 40/380 T	397	197	200	40 PN6	88	150	110	4 Ø 18	425	100	340	130	210	100	520	320	535	0,089	41
DCM 40/460 T	397	197	200	40 PN6	88	150	110		425	100	340	130	210	100	520	320	535	0,089	41
DCM 40/620 T	397	197	200	40 PN6	88	150	110		425	100	340	130	210	100	520	320	535	0,089	41

DCM 50 4 POLES - IN-LINE PUMPS

Pumped liquid temperature range: from -10 °C to +130 °C - Maximum ambient temperature: +40 °C

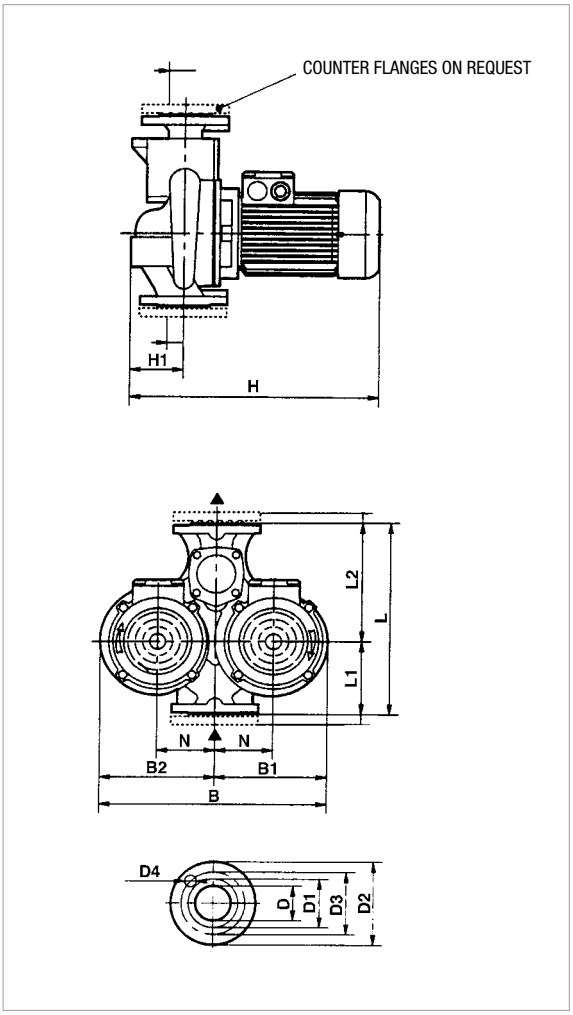

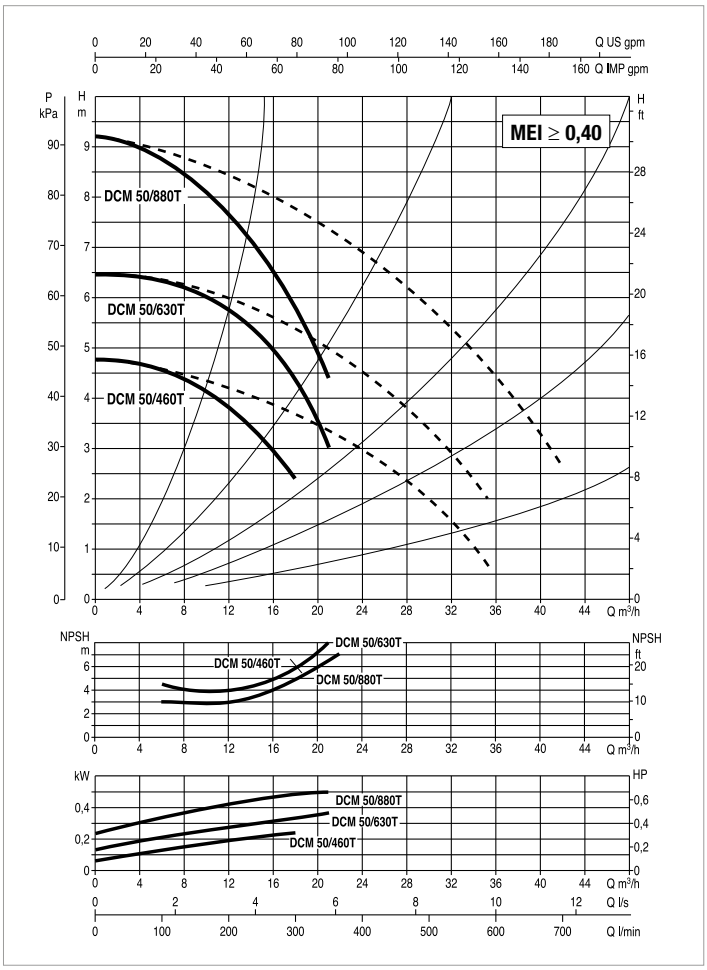

The performance curves are based on kinematic viscosity values = 1 mm^2/s and density equal to 1000 kg/m^3. Curve tolerance according to ISO 9906.

MODEL	CENTRE DISTANCE	PUMP CONNECTIONS	ELECTRICAL DATA							
			POWER INPUT 50 Hz	n r.p.m.	P1 MAX KW	P2 NOMINAL		In A		MOTOR TYPE
						kW	HP	230	400	
DCM 50/460 T	365	DN 50	3x230-400 V ~	1450	0,41	0,25	0,33	1,6	0,9	-
DCM 50/630 T	365	DN 50	3x230-400 V ~	1450	0,57	0,37	0,5	2,1	1,2	-
DCM 50/880 T	410	DN 50	3x230-400 V ~	1450	0,79	0,5	0,7	2,9	1,7	-

MODEL	B	B1	B2	D	D1	D2	D3	D4 no. of holes	H	H1	L	L1	L2	N	PACKING DIMENSIONS			VOLUME (m^3)	WEIGHT Kg
															L/A	L/B	H		
DCM 50/460 T	427	210	217	50 PN10	102	165	125	4 Ø 18	435	110	365	145	220	105	520	320	535	0,089	46
DCM 50/630 T	427	210	217	50 PN10	102	165	125		435	110	4365	145	220	105	520	320	535	0,089	46
DCM 50/880 T	480	235	245	50 PN10	102	165	125		435	110	410	170	240	120	580	360	585	0,122	52

DCM-G 65 4 POLES - IN-LINE PUMPS

Pumped liquid temperature range: from -10 °C to +140 °C - Maximum ambient temperature: +40 °C

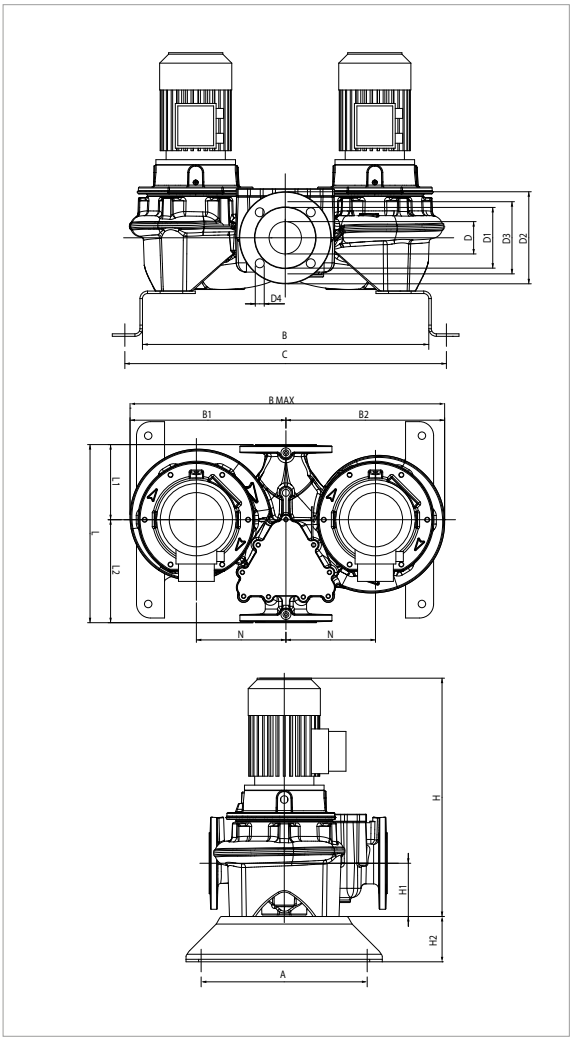

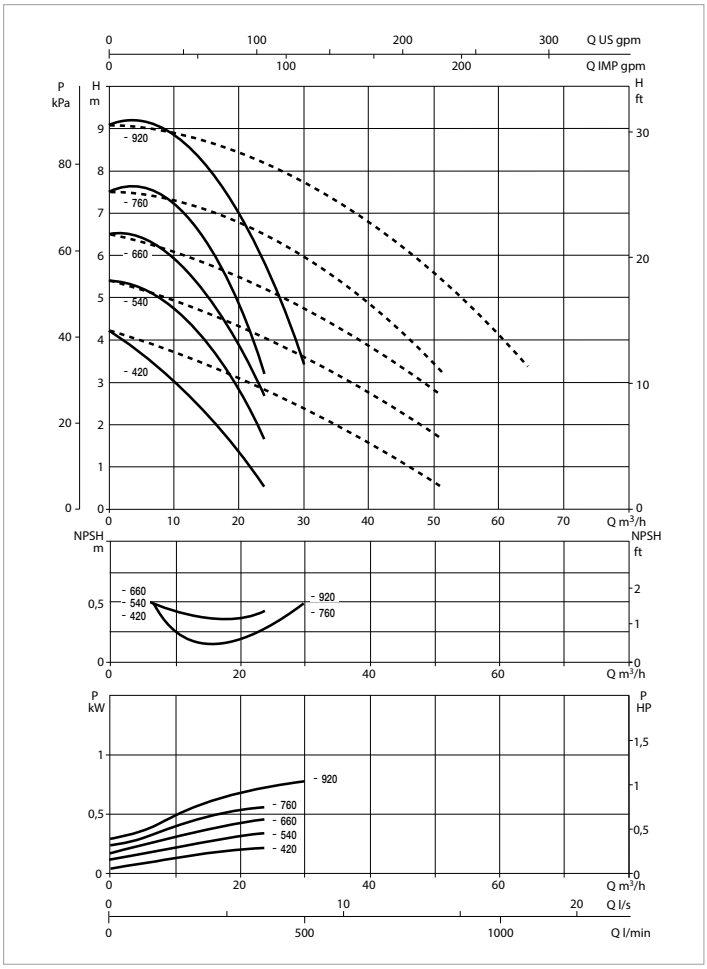

The performance curves are based on kinematic viscosity values = 1 mm^2/s and density equal to 1000 kg/m^3. Curve tolerance according to ISO 9906.

For the MEI index refer to the hydraulic data of the individual pump.

MODEL	CENTRE DISTANCE	PUMP CONNECTIONS	ELECTRICAL DATA									
			POWER INPUT 50 Hz	n r.p.m.	P1 MAX KW	P2 NOMINAL		In A		MOTOR TYPE	MOTOR SIZE	I st. A
						kW	HP	230 V	400 V			
DCM-G 65-420/A/BAQE/0,25	360	DN 65	3x230-400 V ~	1400	0,4	0,25	0,33	1,6	0,9	-	MEC 71	4,6/2,6
DCM-G 65-540/A/BAQE/0,37	360	DN 65	3x230-400 V ~	1380	0,6	0,37	0,5	1,7	1	-	MEC 71	8,1/4,6
DCM-G 65-660/A/BAQE/0,55	360	DN 65	3x230-400 V ~	1400	0,8	0,55	0,75	2,6	1,5	-	MEC 80M	13,9/8
DCM-G 65-760/A/BAQE/0,55	360	DN 65	3x230-400 V ~	1390	0,8	0,55	0,75	2,6	1,5	-	MEC 80M	13,9/8
DCM-G 65-920/A/BAQE/0,75	360	DN 65	3x230-400 V ~	1430	1,2	0,75	1	3,12	1,8	IE3	MEC 80M	17,2/9,9

MODEL	A	B	B1	B2	B max	C	D	D1	D2	D3	D4	no. of holes	H	H1	H2	L	L1	L2	M	N	PACKING DIMENSIONS			VOL. (m^3)	WEIGHT Kg
																					L/A	L/B	H		
DCM-G 65-420/A/BAQE/0,25	330	569	315	320	635	639	65	122	185	145	18		479	107	100	360	151	207	M16	180	358	635	479	0,11	112
DCM-G 65-540/A/BAQE/0,37	330	569	315	320	635	639	65	122	185	145	18		479	107	100	360	151	207	M16	180	358	635	479	0,11	112
DCM-G 65-660/A/BAQE/0,55	330	569	315	320	635	639	65	122	185	145	18	4	534	107	100	360	151	207	M16	180	358	635	534	0,12	136
DCM-G 65-760/A/BAQE/0,55	330	569	315	320	635	639	65	122	185	145	18		534	107	100	360	151	207	M16	180	358	635	534	0,12	135
DCM-G 65-920/A/BAQE/0,75	330	569	315	320	635	639	65	122	185	145	18		511	107	100	360	151	207	M16	180	358	635	534	0,12	126

DAB PUMPS reserves the right to make modifications without notice.

DCM-G 65 4 POLES - IN-LINE PUMPS

Pumped liquid temperature range: from -10 °C to +140 °C - Maximum ambient temperature: +40 °C

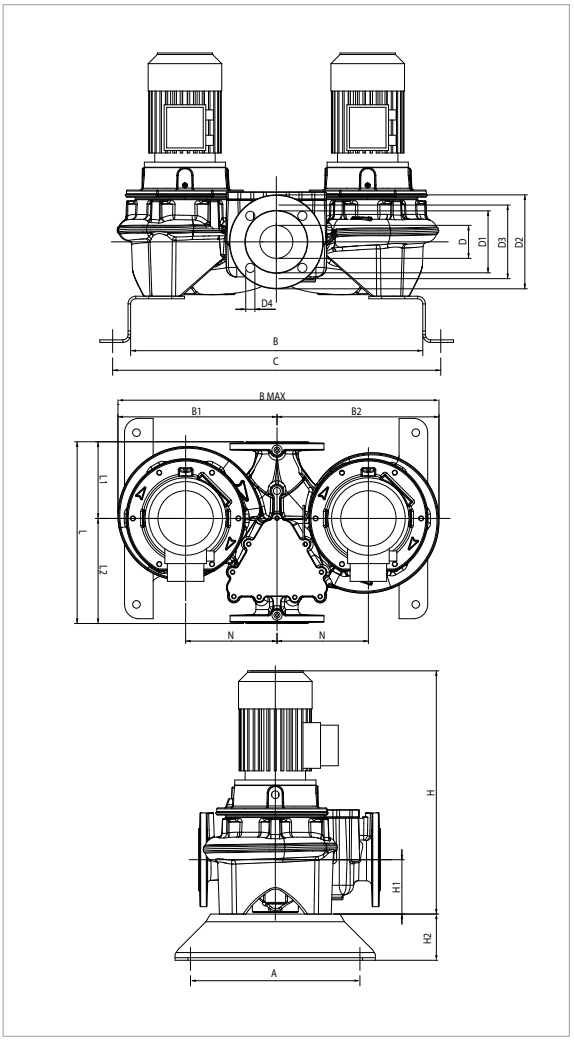

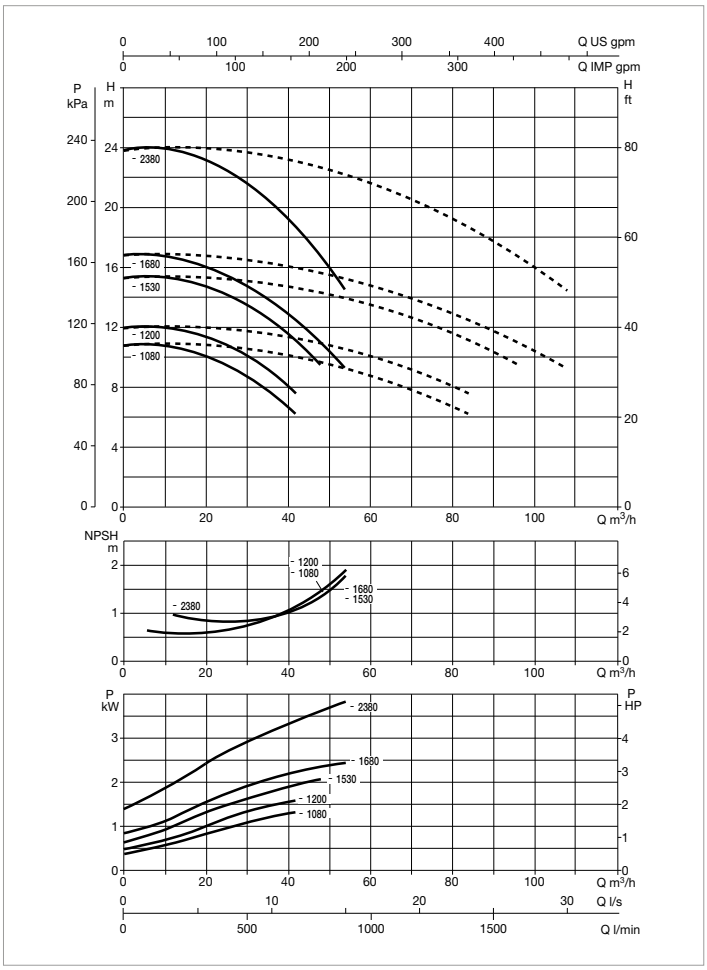

The performance curves are based on kinematic viscosity values = 1 mm^2/s and density equal to 1000 kg/m^3. Curve tolerance according to ISO 9906.

For the MEI index refer to the hydraulic data of the individual pump.

MODEL	CENTRE DISTANCE	PUMP CONNECTIONS	ELECTRICAL DATA									
			POWER INPUT 50 Hz	n r.p.m.	P1 MAX KW	P2 NOMINAL		In A		MOTOR TYPE	MOTOR SIZE	I st. A
						kW	HP	230 V	400 V			
DCM-G 65-1080/A/BAQE/1,1	475	DN 65	3x230-400 V ~	1435	1,6	1,1	1,5	4,33	2,5	IE3	MEC 90S	30,7/17,8
DCM-G 65-1200/A/BAQE/1,5	475	DN 65	3x230-400 V ~	1430	2	1,5	2	6,24	3,6	IE3	MEC 90L	41,2/23,8
DCM-G 65-1530/A/BAQE/2,2	475	DN 65	3x230-400 V ~	1455	2,9	2,2	3	10,22	5,9	IE3	MEC 100L	60,3/34,8
DCM-G 65-1680/A/BAQE/3	475	DN 65	3 x 400 V ~ [1]	1448	2,7	3	4	-	6,8	IE3	MEC 100L	55,1
DCM-G 65-2380/A/BAQE/4	475	DN 65	3 x 400 V ~ [1]	1449	4,3	4	5,5	-	8,2	IE3	MEC 112M	57,8

[1] star start-up possible (λ)

MODEL	A	B	B1	B2	B max	C	D	D1	D2	D3	D4	no. of holes	H	H1	H2	L	L1	L2	M	N	PACKING DIMENSIONS			VOL. (m^3)	WEIGHT Kg
																					L/A	L/B	H		
DCM-G 65-1080/A/BAQE/1,1	330	649	387	395	782	719	65	122	185	145	18		557	125	100	475	177	298	M16	220	475	782	585	0,22	163
DCM-G 65-1200/A/BAQE/1,5	330	649	387	395	782	719	65	122	185	145	18		597	125	100	475	177	298	M16	220	475	782	625	0,23	161
DCM-G 65-1530/A/BAQE/2,2	330	649	387	395	782	719	65	122	185	145	18	4	623	125	100	475	177	298	M16	220	475	782	644	0,24	173
DCM-G 65-1680/A/BAQE/3	330	649	387	395	782	719	65	122	185	145	18		623	125	100	475	177	298	M16	220	475	782	644	0,24	166
DCM-G 65-2380/A/BAQE/4	330	649	387	395	782	719	65	122	185	145	18		717	125	100	475	177	298	M16	220	475	782	729	0,27	188

DCM-G 80 4 POLES - IN-LINE PUMPS

Pumped liquid temperature range: from -10 °C to +140 °C - Maximum ambient temperature: +40 °C

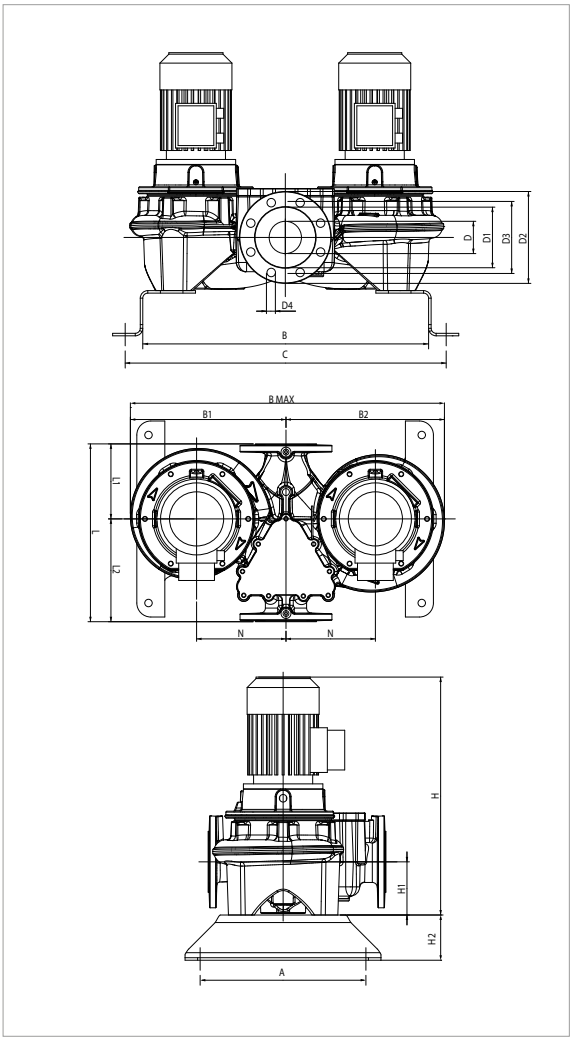

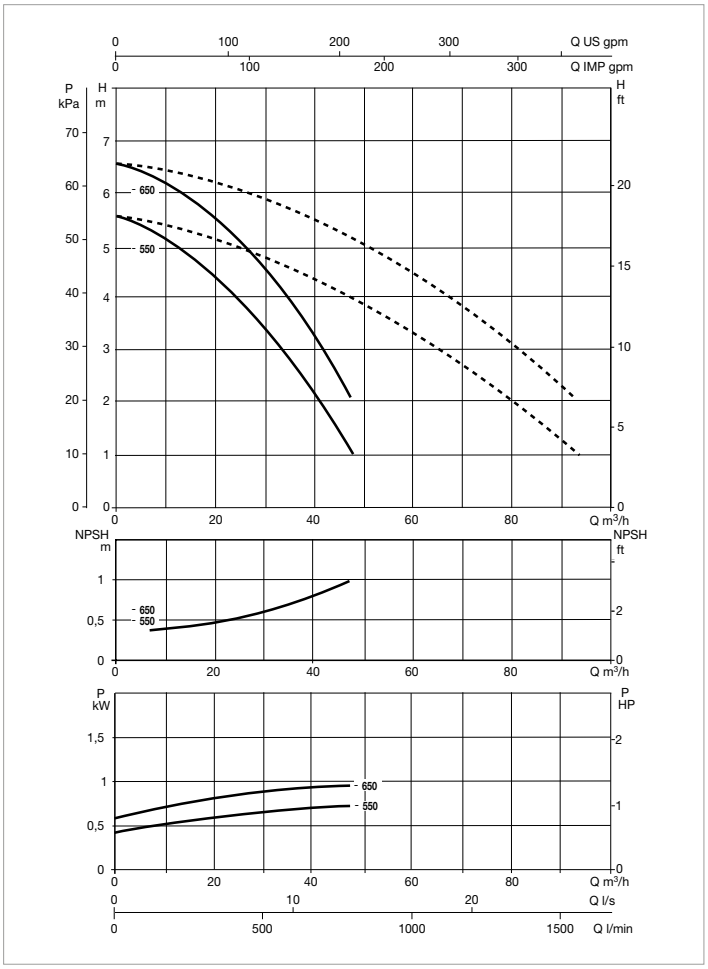

The performance curves are based on kinematic viscosity values = 1 mm^2/s and density equal to 1000 kg/m^3. Curve tolerance according to ISO 9906.

For the MEI index refer to the hydraulic data of the individual pump.

MODEL	CENTRE DISTANCE	PUMP CONNECTIONS	ELECTRICAL DATA									
			POWER INPUT 50 Hz	n r.p.m.	P1 MAX KW	P2 NOMINAL		In A		MOTOR TYPE	MOTOR SIZE	I st. A
						kW	HP	230 V	400 V			
DCM-G 80-550/A/BAQE/0,55	360	DN 80	3x230-400 V ~	1390	0,8	0,55	0,75	2,6	1,5	-	MEC 80M	13,9/8
DCM-G 80-650/A/BAQE/0,75	360	DN 80	3x230-400 V ~	1430	1,2	0,75	1	3,12	1,8	IE3	MEC 80M	17,2/9,9

MODEL	A	B	B1	B2	B max	C	D	D1	D2	D3	D4	no. of holes	H	H1	H2	L	L1	L2	M	N	PACKING DIMENSIONS			VOL. (m^3)	WEIGHT Kg
																					L/A	L/B	H		
DCM-G 80-550/A/BAQE/0,55	330	580	305	310	615	650	80	137	200	160	18	8	546	115	100	360	165	195	M16	180	360	615	546	0,12	126
DCM-G 80-650/A/BAQE/0,75	330	580	305	310	615	650	80	137	200	160	18		523	115	100	360	165	195	M16	180	360	615	546	0,12	116

DAB PUMPS reserves the right to make modifications without notice.

DCM-G 80 4 POLES - IN-LINE PUMPS

Pumped liquid temperature range: from -10 °C to +140 °C - Maximum ambient temperature: +40 °C

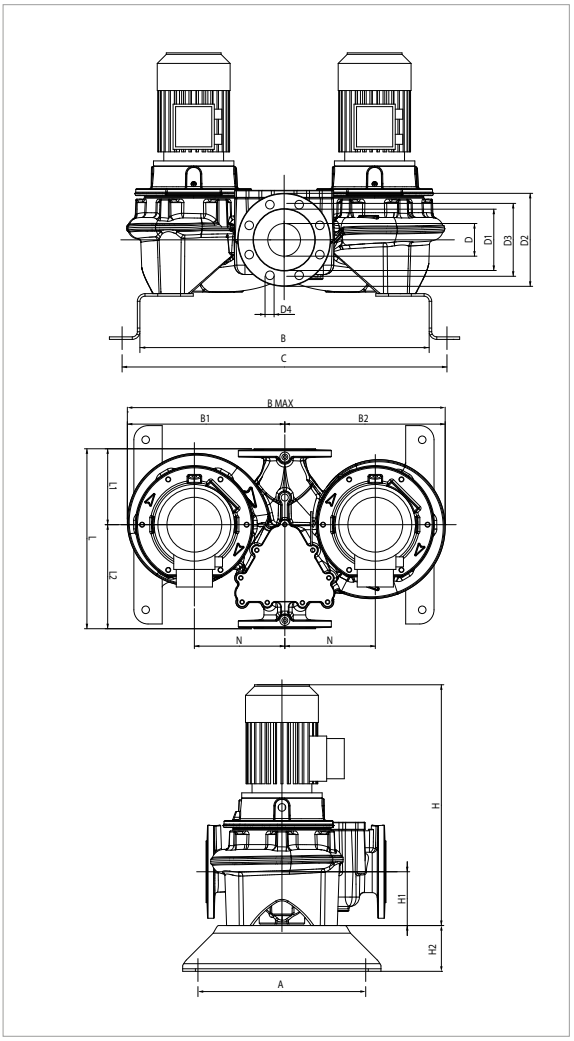

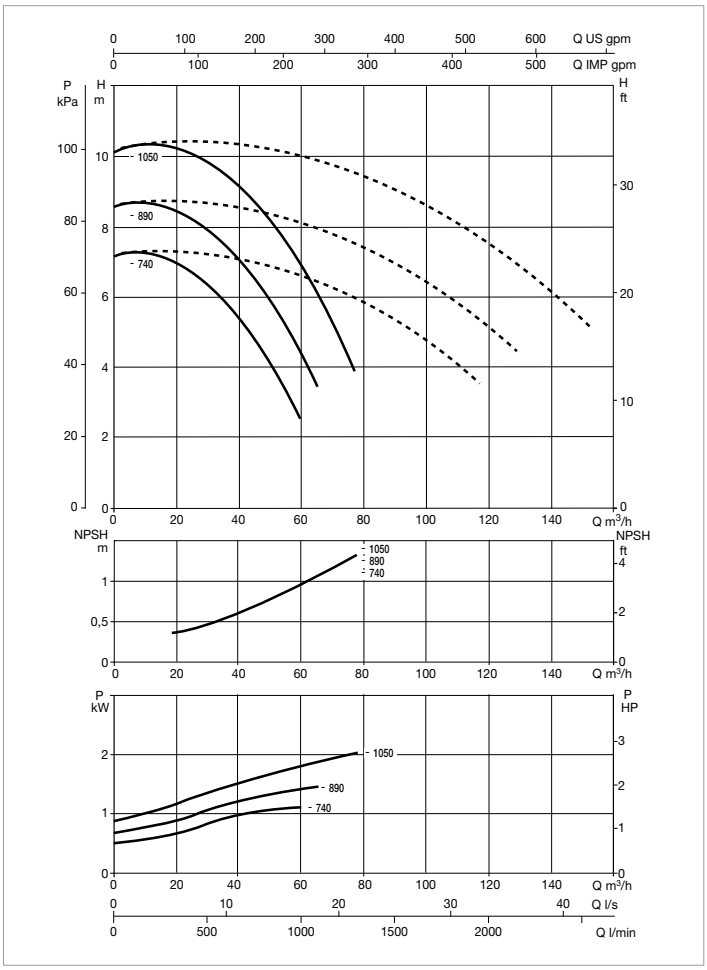

The performance curves are based on kinematic viscosity values = 1 mm^2/s and density equal to 1000 kg/m^3. Curve tolerance according to ISO 9906.

For the MEI index refer to the hydraulic data of the individual pump.

MODEL	CENTRE DISTANCE	PUMP CONNECTIONS	ELECTRICAL DATA									
			POWER INPUT 50 Hz	n r.p.m.	P1 MAX KW	P2 NOMINAL		In A		MOTOR TYPE	MOTOR SIZE	I st. A
						kW	HP	230 V	400 V			
DCM-G 80-740/A/BAQE/1,1	440	DN 80	3x230-400 V ~	1439	1,5	1,1	1,5	4,33	2,5	IE3	MEC 90S	30,7/17,8
DCM-G 80-890/A/BAQE/1,5	440	DN 80	3x230-400 V ~	1430	2	1,5	2	6,24	3,6	IE3	MEC 90L	41,2/23,8
DCM-G 80-1050/A/BAQE/2,2	440	DN 80	3x230-400 V ~	1450	2,4	2,2	3	10,22	5,9	IE3	MEC 100L	60,3/34,8

MODEL	A	B	B1	B2	B max	C	D	D1	D2	D3	D4	no. of holes	H	H1	H2	L	L1	L2	M	N	PACKING DIMENSIONS			VOL. (m^3)	WEIGHT Kg
																					L/A	L/B	H		
DCM-G 80-740/A/BAQE/1,1	330	620	355	365	720	690	80	137	200	160	18		563	115	100	440	180	260	M16	200	440	720	586	0,19	178
DCM-G 80-890/A/BAQE/1,5	330	620	355	365	720	690	80	137	200	160	18	8	598	115	100	440	180	260	M16	200	440	720	626	0,2	179
DCM-G 80-1050/A/BAQE/2,2	330	620	355	365	720	690	80	137	200	160	18		623	115	100	440	180	260	M16	200	440	720	644	0,2	203

DCM-G 80 4 POLES - IN-LINE PUMPS

Pumped liquid temperature range: from -10 °C to +140 °C - Maximum ambient temperature: +40 °C

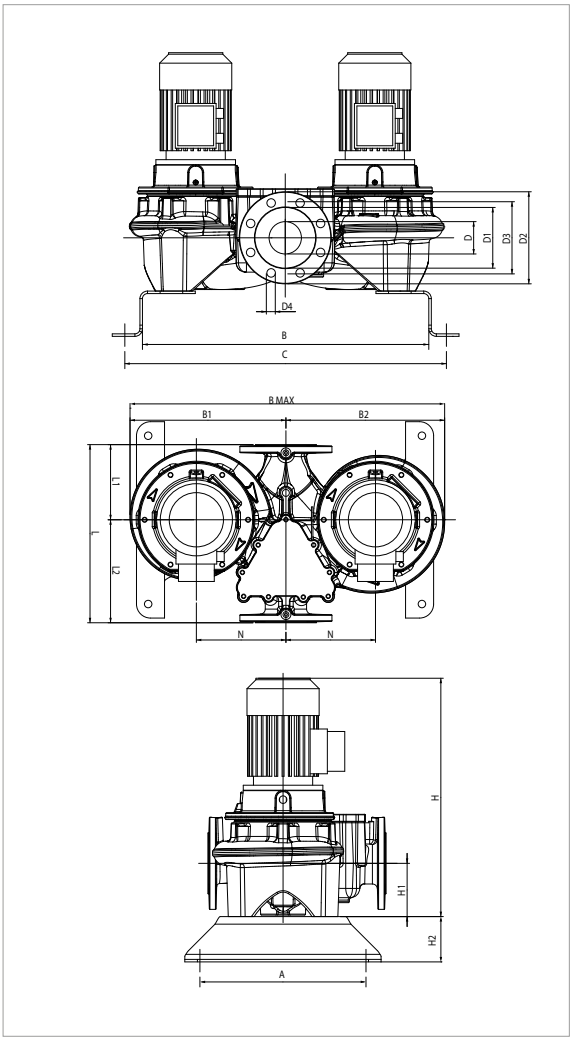

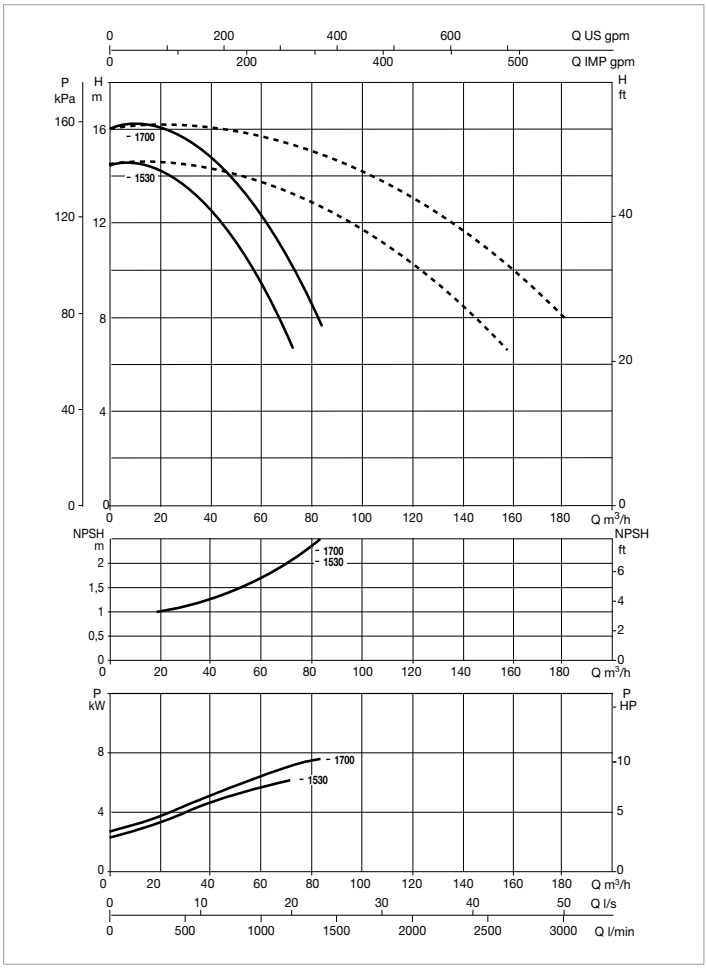

The performance curves are based on kinematic viscosity values = 1 mm^2/s and density equal to 1000 kg/m^3. Curve tolerance according to ISO 9906.

For the MEI index refer to the hydraulic data of the individual pump.

MODEL	CENTRE DISTANCE	PUMP CONNECTIONS	ELECTRICAL DATA									
			POWER INPUT 50 Hz	n r.p.m.	P1 MAX KW	P2 NOMINAL		In A		MOTOR TYPE	MOTOR SIZE	I st. A
						kW	HP	230 V	400 V			
DCM-G 80-1530/A/BAQE/3	500	DN 80	3 x 400 V ~ [1]	1441	3,6	3	4	-	6,8	IE3	MEC 100L	55,1
DCM-G 80-1700/A/BAQE/4	500	DN 80	3 x 400 V ~ [1]	1452	3,9	4	5,5	-	8,2	IE3	MEC 112M	57,8

[1] star start-up possible (⅄)

MODEL	A	B	B1	B2	B max	C	D	D1	D2	D3	D4	no. of holes	H	H1	H2	L	L1	L2	M	N	PACKING DIMENSIONS			VOL. (m^3)	WEIGHT Kg
																					L/A	L/B	H		
DCM-G 80-1530/A/BAQE/3	362	662	405	415	820	732	80	137	200	160	18	8	629	115	100	500	220	280	M16	235	500	820	650	0,27	211
DCM-G 80-1700/A/BAQE/4	362	662	405	415	820	732	80	137	200	160	18		723	115	100	500	220	280	M16	235	500	820	735	0,3	232

DCM-G 80 4 POLES - IN-LINE PUMPS

Pumped liquid temperature range: from -10 °C to +140 °C - Maximum ambient temperature: +40 °C

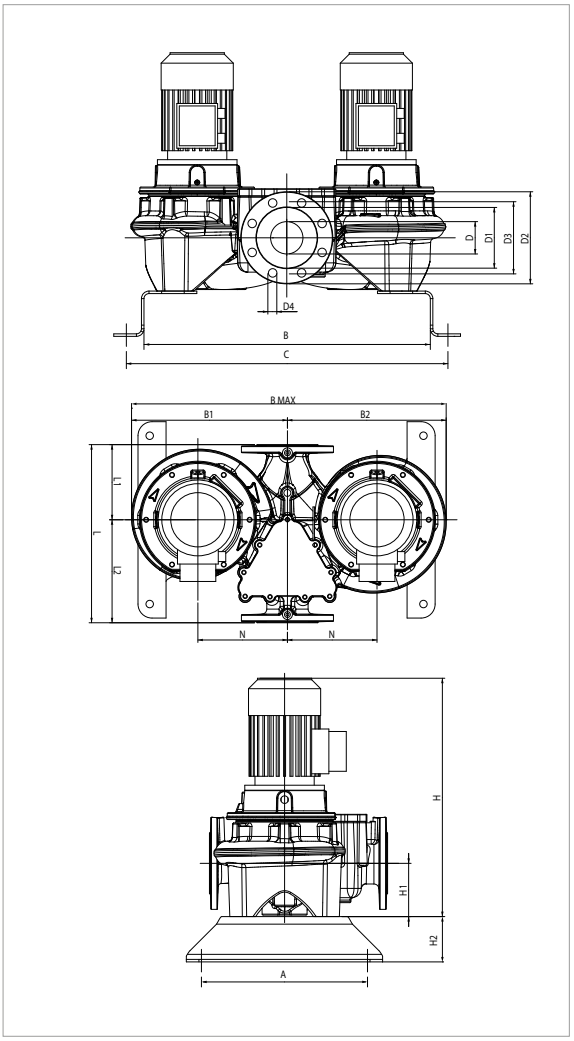

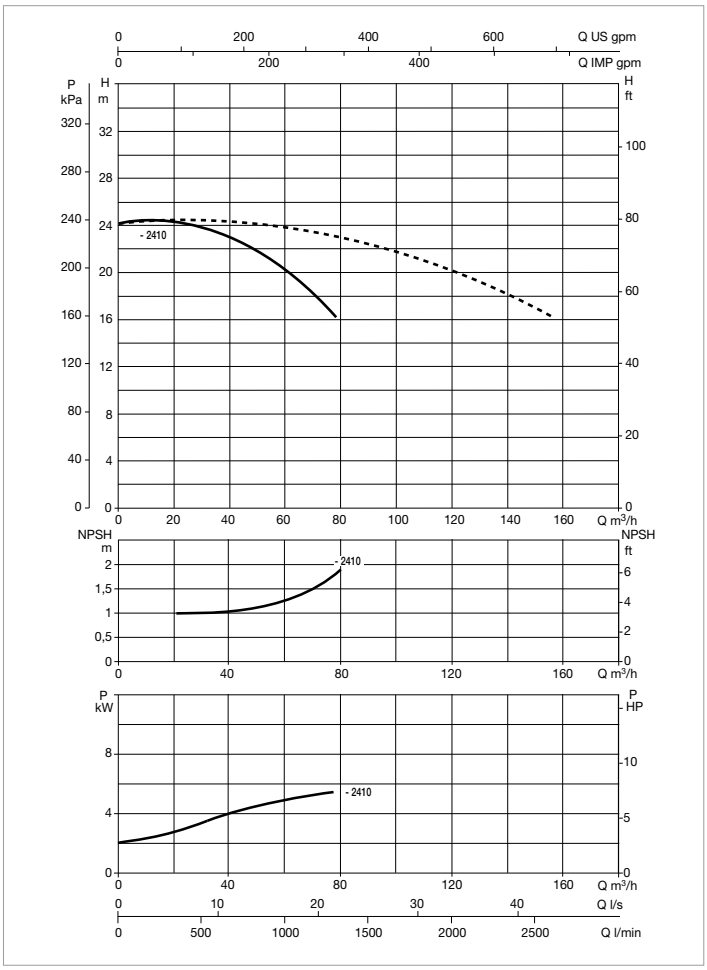

The performance curves are based on kinematic viscosity values = 1 mm^2/s and density equal to 1000 kg/m^3. Curve tolerance according to ISO 9906.

For the MEI index refer to the hydraulic data of the individual pump.

MODEL	CENTRE DISTANCE	PUMP CONNECTIONS	ELECTRICAL DATA									
			POWER INPUT 50 Hz	n r.p.m.	P1 MAX KW	P2 NOMINAL		In A		MOTOR TYPE	MOTOR SIZE	I st. A
						kW	HP	230 V	400 V			
DCM-G 80-2410/A/BAQE/5,5	620	DN 80	3 x 400 V ~ [1]	1461	6,5	5,5	7,5	-	10,6	IE3	MEC 132S	92,2

[1] star start-up possible (λ)

MODEL	A	B	B1	B2	B max	C	D	D1	D2	D3	D4	no. of holes	H	H1	H2	L	L1	L2	M	N	PACKING DIMENSIONS			VOL. (m^3)	WEIGHT Kg
																					L/A	L/B	H		
DCM-G 80-2410/A/BAQE/5,5	500	804	530	540	1070	924	80	137	200	160	18	8	775	140	100	620	280	340	M16	300	620	1070	803	0,53	447

DCM-G 80 4 POLES - IN-LINE PUMPS

Pumped liquid temperature range: from -10 °C to +140 °C - Maximum ambient temperature: +40 °C

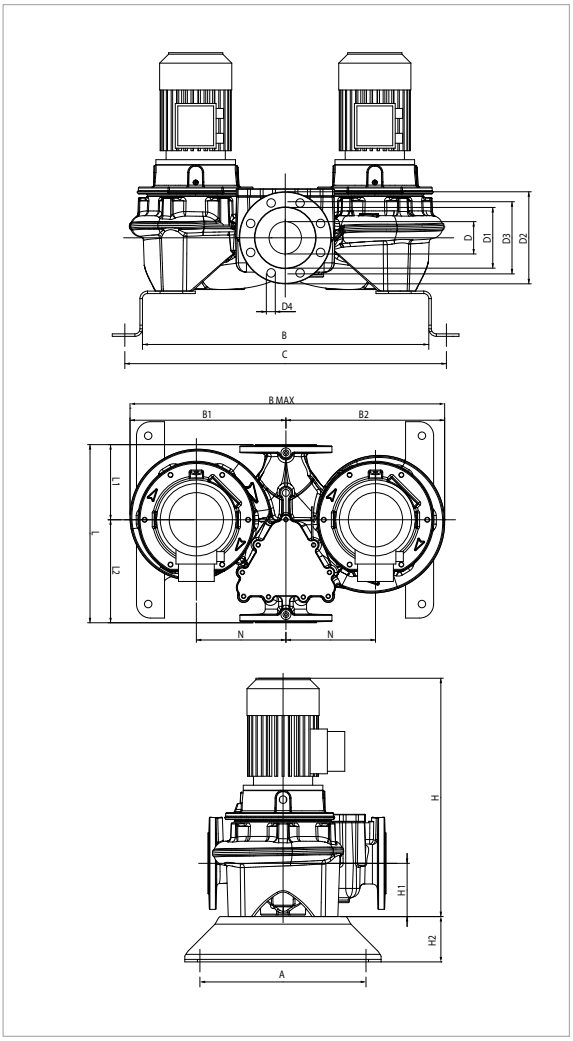

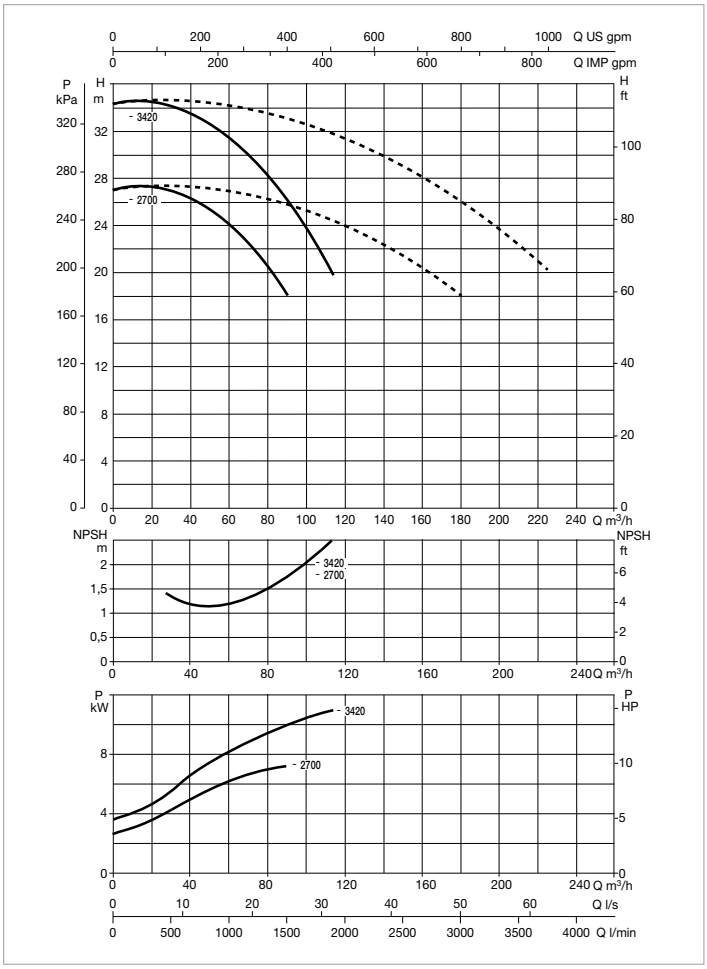

The performance curves are based on kinematic viscosity values = 1 mm^2/s and density equal to 1000 kg/m^3. Curve tolerance according to ISO 9906.

For the MEI index refer to the hydraulic data of the individual pump.

MODEL	CENTRE DISTANCE	PUMP CONNECTIONS	ELECTRICAL DATA									
			POWER INPUT 50 Hz	n r.p.m.	P1 MAX KW	P2 NOMINAL		In A		MOTOR TYPE	MOTOR SIZE	I st. A
						kW	HP	230 V	400 V			
DCM-G 80-2700/A/BAQE/7,5	620	DN 80	3 x 400 V ~ [1]	1463	8,7	7,5	10	-	14,4	IE3	MEC 132M	124,1
DCM-G 80-3420/A/BAQE/11	620	DN 80	3 x 400 V ~ [1]	1472	12,7	11	15	-	22,4	IE3	MEC 160M	172,2

[1] star start-up possible (λ)

MODEL	A	B	B1	B2	B max	C	D	D1	D2	D3	D4	no. of holes	H	H1	H2	L	L1	L2	M	N	PACKING DIMENSIONS			VOL. (m^3)	WEIGHT Kg
																					L/A	L/B	H		
DCM-G 80-2700/A/BAQE/7,5	500	804	530	540	1070	924	80	137	200	160	18	8	850	140	100	620	280	340	M16	300	620	1070	843	0,56	468
DCM-G 80-3420/A/BAQE/11	500	804	530	540	1070	924	80	137	200	160	18		948	140	100	620	280	340	M16	300	620	1070	948	0,63	502

DCM-G 100 4 POLES - IN-LINE PUMPS

Pumped liquid temperature range: from -10 °C to +140 °C - Maximum ambient temperature: +40 °C

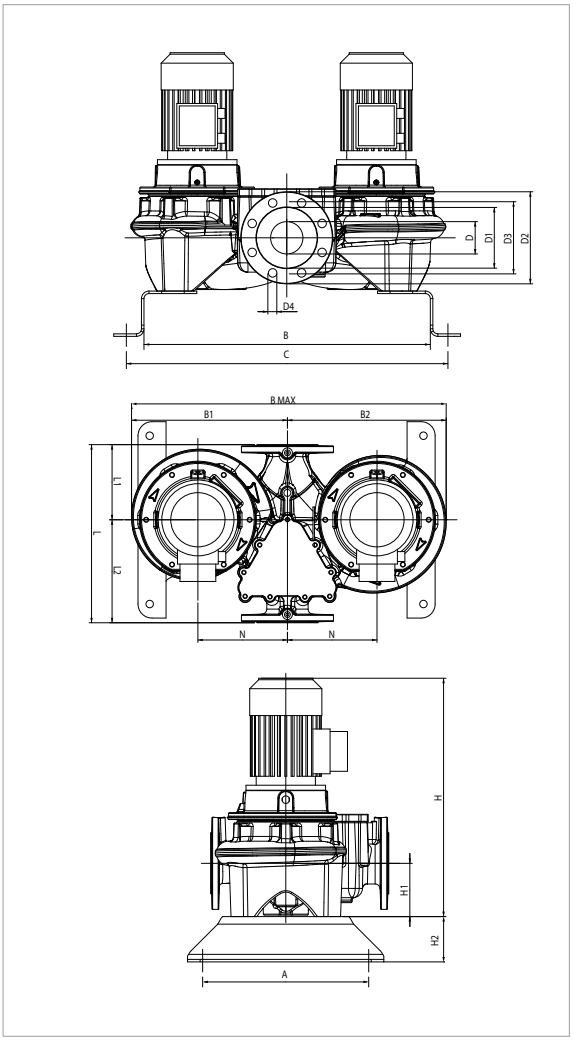

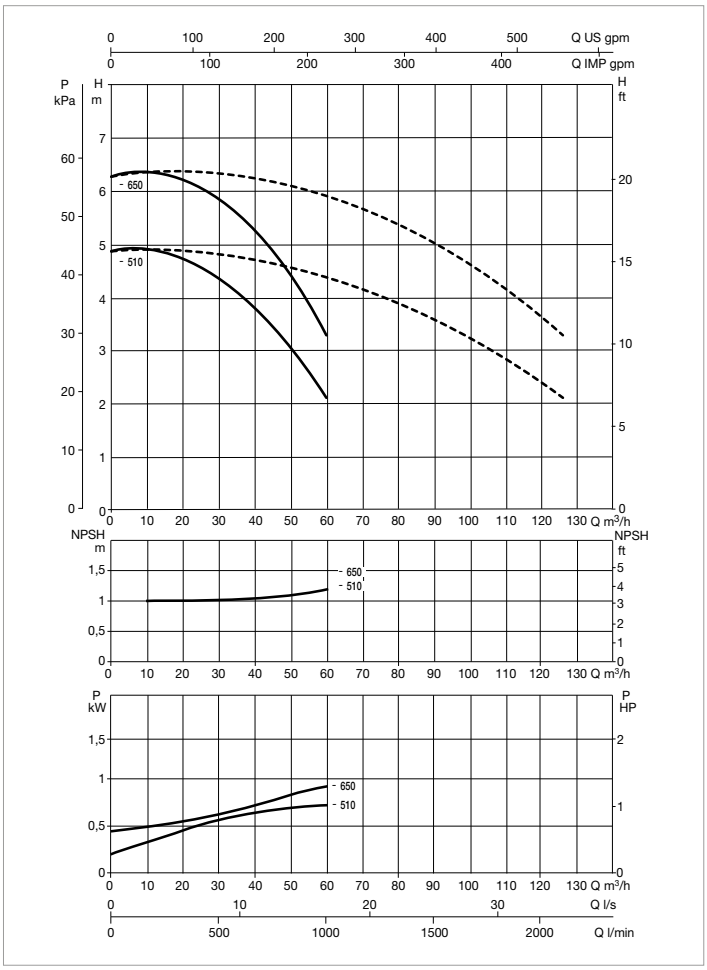

The performance curves are based on kinematic viscosity values = 1 mm^2/s and density equal to 1000 kg/m^3. Curve tolerance according to ISO 9906.

For the MEI index refer to the hydraulic data of the individual pump.

MODEL	CENTRE DISTANCE	PUMP CONNECTIONS	ELECTRICAL DATA									
			POWER INPUT 50 Hz	n r.p.m.	P1 MAX KW	P2 NOMINAL		In A		MOTOR TYPE	MOTOR SIZE	I st. A
						kW	HP	230 V	400 V			
DCM-G 100-510/A/BAQE/0,75	500	DN 100	3x230-400 V ~	1430	1,2	0,75	1	3,12	1,8	IE3	MEC 80M	17,2/9,9
DCM-G 100-650/A/BAQE/1,1	500	DN 100	3x230-400 V ~	1440	1,4	1,1	1,5	4,33	2,5	IE3	MEC 90S	30,7/17,8

MODEL	A	B	B1	B2	B max	C	D	D1	D2	D3	D4	no. of holes	H	H1	H2	L	L1	L2	M	N	PACKING DIMENSIONS			VOL. (m^3)	WEIGHT Kg
																					L/A	L/B	H		
DCM-G 100-510/A/BAQE/0,75	362	637	330	345	675	717	100	156	220	180	18	8	550	140	100	500	191	309	M16	200	500	675	573	0,19	200
DCM-G 100-650/A/BAQE/1,1	362	637	330	345	675	717	100	156	220	180	18		585	140	100	500	191	309	M16	200	500	675	613	0,21	202

DCM-G 100 4 POLES - IN-LINE PUMPS

Pumped liquid temperature range: from -10 °C to +140 °C - Maximum ambient temperature: +40 °C

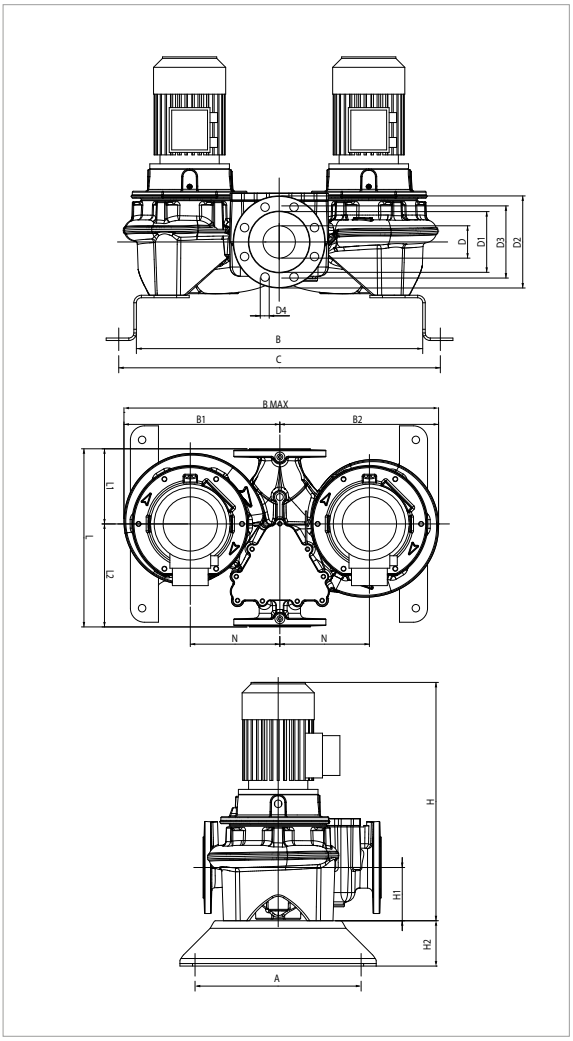

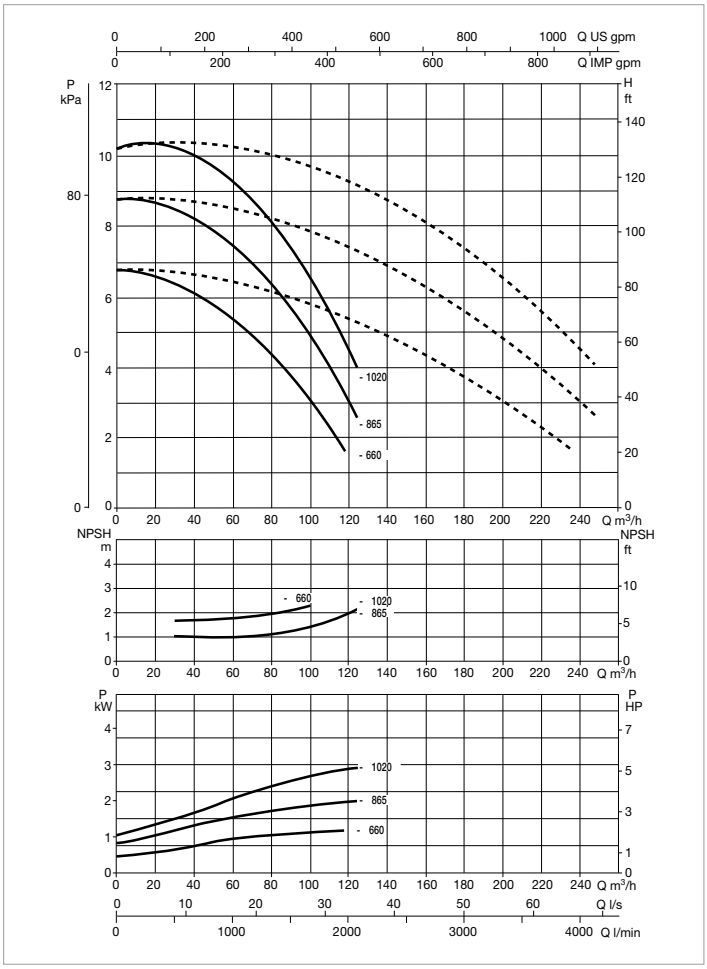

The performance curves are based on kinematic viscosity values = 1 mm^2/s and density equal to 1000 kg/m^3. Curve tolerance according to ISO 9906.

For the MEI index refer to the hydraulic data of the individual pump.

MODEL	CENTRE DISTANCE	PUMP CONNECTIONS	ELECTRICAL DATA									
			POWER INPUT 50 Hz	n r.p.m.	P1 MAX KW	P2 NOMINAL		In A		MOTOR TYPE	MOTOR SIZE	I st. A
						kW	HP	230 V	400 V			
DCM-G 100-660/A/BAQE/1,5	550	DN 100	3x230-400 V ~	1430	2	1,5	2	6,24	3,6	IE3	MEC 90L	41,2/23,8
DCM-G 100-865/A/BAQE/2,2	550	DN 100	3x230-400 V ~	1455	3	2,2	3	10,22	5,9	IE3	MEC 100L	60,3/34,8
DCM-G 100-1020/A/BAQE/3	550	DN 100	3 x 400 V ~ [1]	1441	3,6	3	4	-	6,8	IE3	MEC 100L	55,1

[1] star start-up possible (λ)

MODEL	A	B	B1	B2	B max	C	D	D1	D2	D3	D4	no. of holes	H	H1	H2	L	L1	L2	M	N	PACKING DIMENSIONS			VOL. (m^3)	WEIGHT Kg
																					L/A	L/B	H		
DCM-G 100-660/A/BAQE/1,5	362	733	395	410	805	813	100	156	220	180	18		620	140	100	550	221	329	M16	235	550	805	648	0,29	229
DCM-G 100-865/A/BAQE/2,2	362	733	395	410	805	813	100	156	220	180	18	8	645	140	100	550	221	329	M16	235	550	805	666	0,29	225
DCM-G 100-1020/A/BAQE/3	362	733	395	410	805	813	100	156	220	180	18		645	140	100	550	221	329	M16	235	550	805	666	0,29	224

DCM-G 100 4 POLES - IN-LINE PUMPS

Pumped liquid temperature range: from -10 °C to +140 °C - Maximum ambient temperature: +40 °C

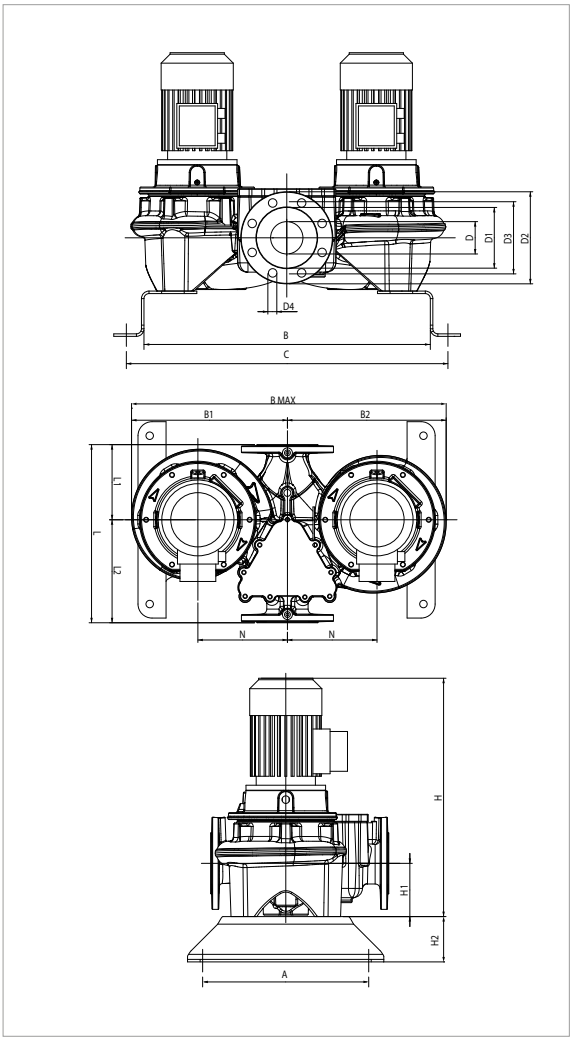

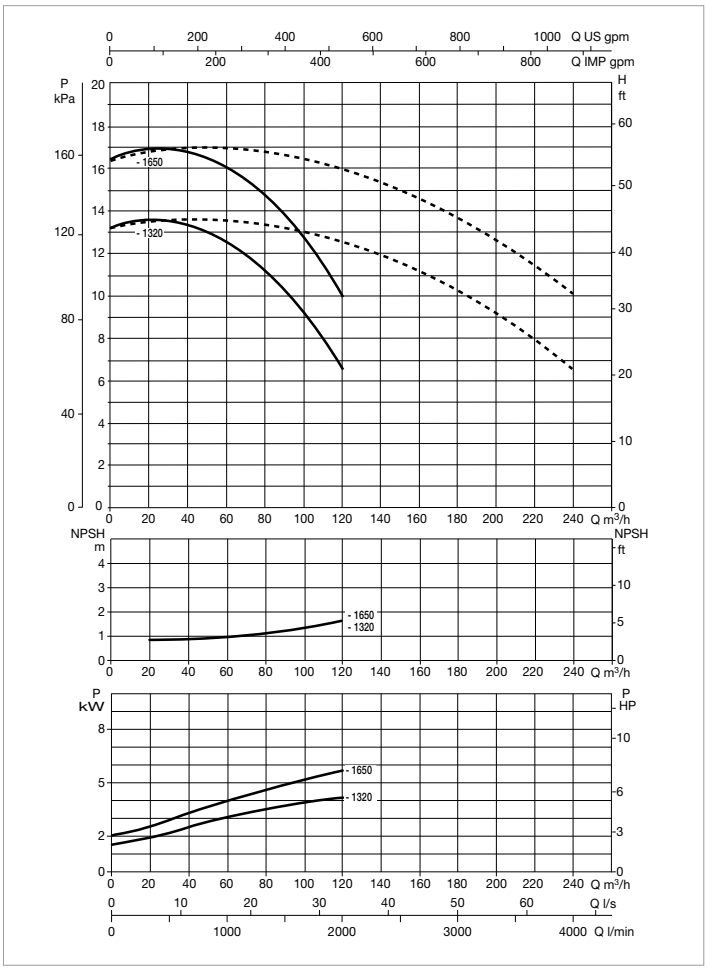

The performance curves are based on kinematic viscosity values = 1 mm^2/s and density equal to 1000 kg/m^3. Curve tolerance according to ISO 9906.

For the MEI index refer to the hydraulic data of the individual pump.

MODEL	CENTRE DISTANCE	PUMP CONNECTIONS	ELECTRICAL DATA									
			POWER INPUT 50 Hz	n r.p.m.	P1 MAX KW	P2 NOMINAL		In A		MOTOR TYPE	MOTOR SIZE	I st. A
						kW	HP	230 V	400 V			
DCM-G 100-1320/A/BAQE/4	550	DN 100	3 x 400 V ~ [1]	1450	4,6	4	5,5	-	8,2	IE3	MEC 112M	57,8
DCM-G 100-1650/A/BAQE/5,5	550	DN 100	3 x 400 V ~ [1]	1464	6,9	5,5	7,5	-	10,6	IE3	MEC 132S	92,2

[1] star start-up possible (λ)

MODEL	A	B	B1	B2	B max	C	D	D1	D2	D3	D4	no. of holes	H	H1	H2	L	L1	L2	M	N	PACKING DIMENSIONS			VOL. (m^3)	WEIGHT Kg
																					L/A	L/B	H		
DCM-G 100-1320/A/BAQE/4	362	753	430	440	870	833	100	156	220	180	18	8	799	140	100	550	221	329	M16	250	550	870	811	0,39	263
DCM-G 100-1650/A/BAQE/5,5	362	753	430	440	870	833	100	156	220	180	18	8	784	140	100	550	221	329	M16	250	550	870	812	0,39	356

DCM-G 100 4 POLES T- IN-LINE PUMPS

Pumped liquid temperature range: from -10 °C to +140 °C - Maximum ambient temperature: +40 °C

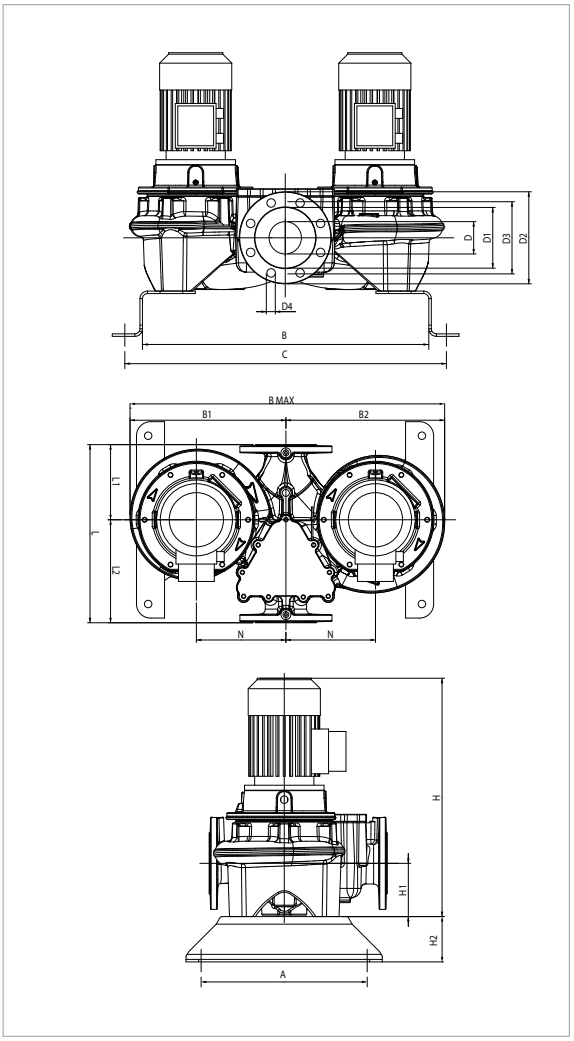

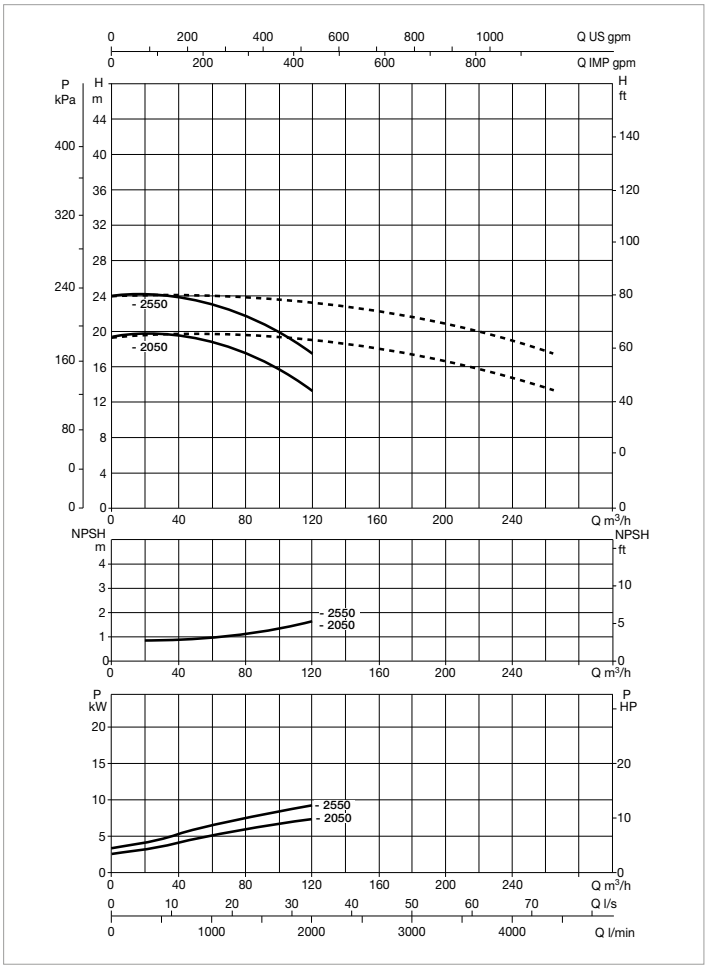

The performance curves are based on kinematic viscosity values = 1 mm^2/s and density equal to 1000 kg/m^3. Curve tolerance according to ISO 9906.

For the MEI index refer to the hydraulic data of the individual pump.

MODEL	CENTRE DISTANCE	PUMP CONNECTIONS	ELECTRICAL DATA									
			POWER INPUT 50 Hz	n r.p.m.	P1 MAX KW	P2 NOMINAL		In A		MOTOR TYPE	MOTOR SIZE	I st. A
						kW	HP	230 V	400 V			
DCM-G 100-2050/A/BAQE/7,5	670	DN 100	3 x 400 V ~ [1]	1461	8,5	7,5	10	-	14,4	IE3	MEC 132M	124,1
DCM-G 100-2550/A/BAQE/11	670	DN 100	3 x 400 V ~ [1]	1470	12,1	11	15	-	22,4	IE3	MEC 160M	172,2

[1] star start-up possible (⅄)

MODEL	A	B	B1	B2	B max	C	D	D1	D2	D3	D4	no. of holes	H	H1	H2	L	L1	L2	M	N	PACKING DIMENSIONS			VOL. (m^3)	WEIGHT Kg
																					L/A	L/B	H		
DCM-G 100-2050/A/BAQE/7,5	500	836	560	575	1135	956	100	156	220	180	18	18	895	175	100	670	266	404	M16	300	670	1135	888	0,68	527
DCM-G 100-2550/A/BAQE/11	500	836	560	575	1135	956	100	156	220	180	18		993	175	100	670	266	404	M16	300	670	1135	993	0,76	534

DCM-G 100 4 POLES - IN-LINE PUMPS

Pumped liquid temperature range: from -10 °C to +140 °C - Maximum ambient temperature: +40 °C

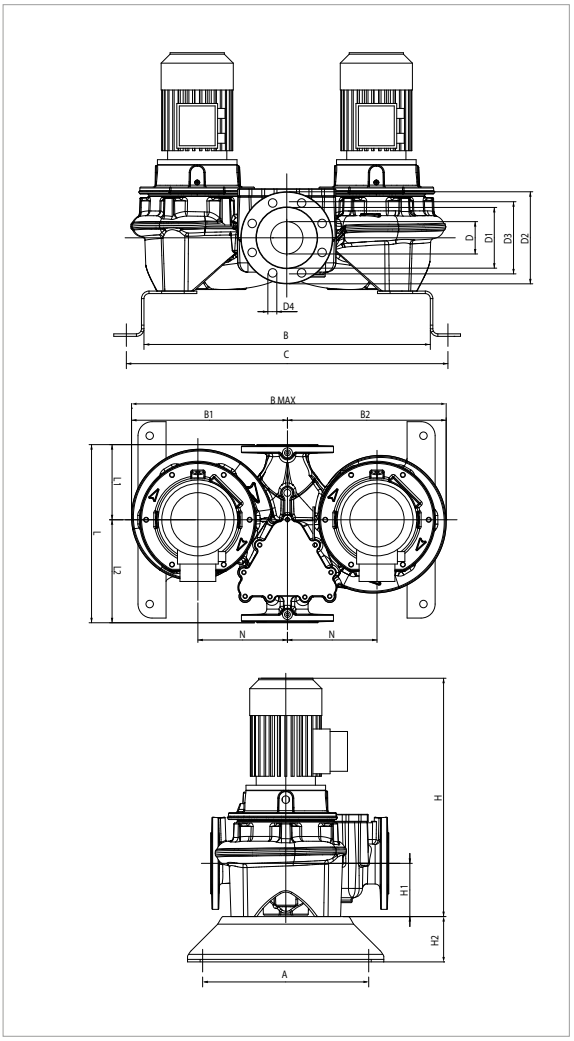

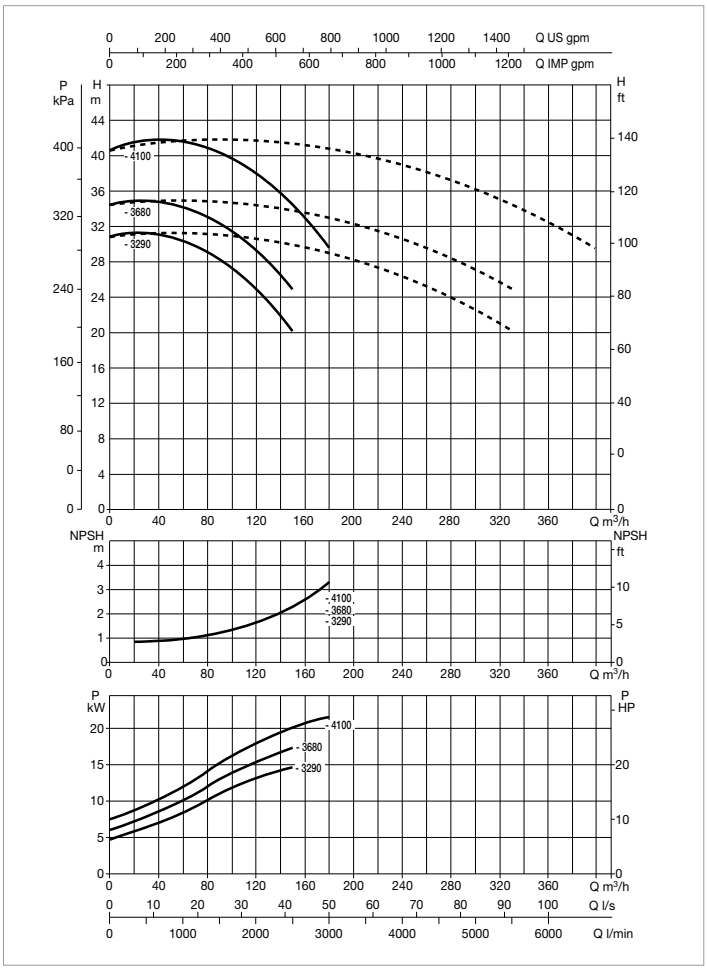

The performance curves are based on kinematic viscosity values = 1 mm^2/s and density equal to 1000 kg/m^3. Curve tolerance according to ISO 9906.

For the MEI index refer to the hydraulic data of the individual pump.

MODEL	CENTRE DISTANCE	PUMP CONNECTIONS	ELECTRICAL DATA									
			POWER INPUT 50 Hz	n r.p.m.	P1 MAX KW	P2 NOMINAL		In A		MOTOR TYPE	MOTOR SIZE	I st. A
						kW	HP	230 V	400 V			
DCM-G 100-3290/A/BAQE/15	670	DN 100	3 x 400 V ~ [1]	1471	17,1	15	20	-	30,5	IE3	MEC 160L	232,4
DCM-G 100-3680/A/BAQE/18,5	670	DN 100	3 x 400 V ~ [1]	1470	19,6	18,5	25	-	34,3	IE3	MEC 180M	268,6
DCM-G 100-4100/A/BAQE/22	670	DN 100	3 x 400 V ~ [1]	1470	22,4	22	30	-	40,2	IE3	MEC 180L	336,1

[1] star start-up possible (⅄)

MODEL	A	B	B1	B2	B max	C	D	D1	D2	D3	D4	no. of holes	H	H1	H2	L	L1	L2	M	N	PACKING DIMENSIONS			VOL. (m^3)	WEIGHT Kg
																					L/A	L/B	H		
DCM-G 100-3290/A/BAQE/15	500	836	560	575	1135	956	100	156	220	180	18	8	1036	175	100	670	266	404	M16	300	670	1135	1048	0,8	723
DCM-G 100-3680/A/BAQE/18,5	500	836	560	575	1135	956	100	156	220	180	18		1068	175	100	670	266	404	M16	300	670	1135	1068	0,81	860
DCM-G 100-4100/A/BAQE/22	500	836	560	575	1135	956	100	156	220	180	18		1106	175	100	670	266	404	M16	300	670	1135	1106	0,84	969

DCM-G 125 4 POLES - IN-LINE PUMPS

Pumped liquid temperature range: from -10 °C to +140 °C - Maximum ambient temperature: +40 °C

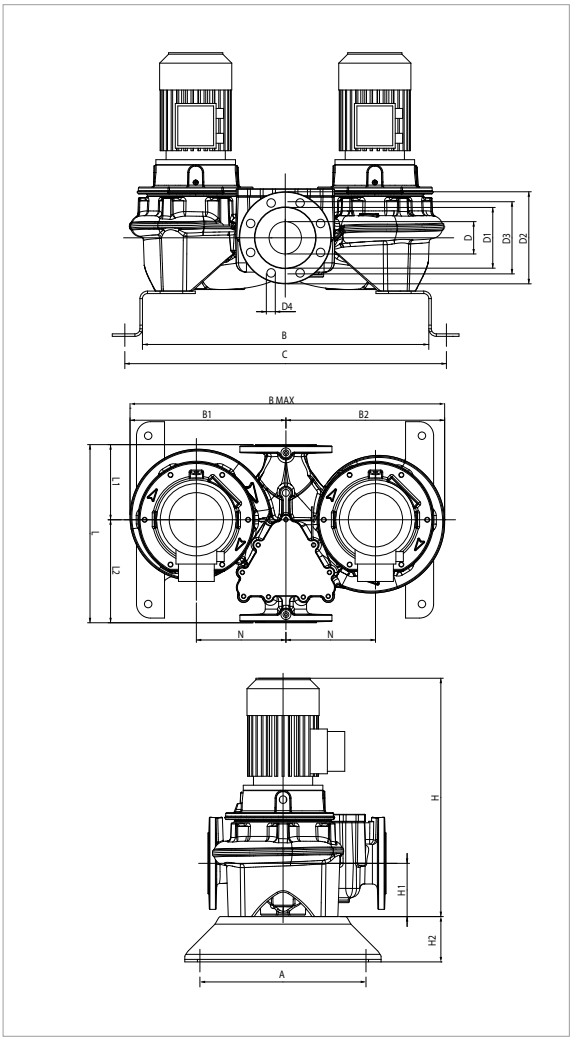

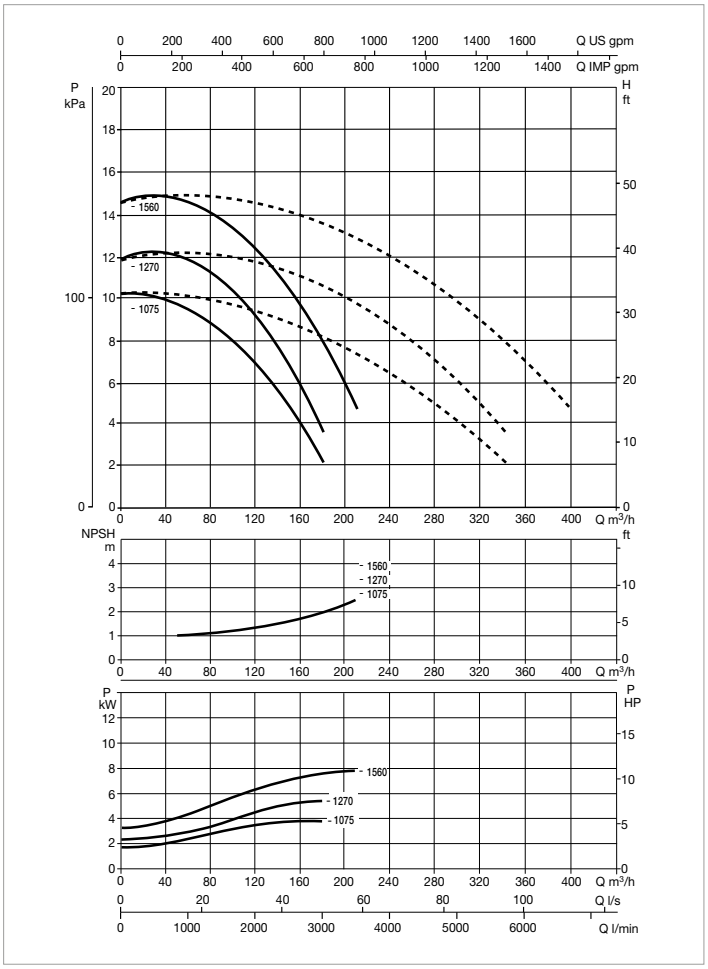

The performance curves are based on kinematic viscosity values = 1 mm^2/s and density equal to 1000 kg/m^3. Curve tolerance according to ISO 9906.

For the MEI index refer to the hydraulic data of the individual pump.

MODEL	CENTRE DISTANCE	PUMP CONNECTIONS	ELECTRICAL DATA									
			POWER INPUT 50 Hz	n r.p.m.	P1 MAX KW	P2 NOMINAL		In A		MOTOR TYPE	MOTOR SIZE	I st. A
						kW	HP	230 V	400 V			
DCM-G 125-1075/A/BAQE/4	620	DN 125	3 x 400 V ~ [1]	1455	5,1	4	5,5	-	8,2	IE3	MEC 112M	57,8
DCM-G 125-1270/A/BAQE/5,5	620	DN 125	3 x 400 V ~ [1]	1465	7,2	5,5	7,5	-	10,6	IE3	MEC 132S	92,2
DCM-G 125-1560/A/BAQE/7,5	620	DN 125	3 x 400 V ~ [1]	1469	9,5	7,5	10	-	14,4	IE3	MEC 132M	124,1

[1] star start-up possible (⅄)

MODEL	A	B	B1	B2	B max	C	D	D1	D2	D3	D4	no. of holes	H	H1	H2	L	L1	L2	M	N	PACKING DIMENSIONS			VOL. (m^3)	WEIGHT Kg
																					L/A	L/B	H		
DCM-G 125-1075/A/BAQE/4	500	810	515	535	1050	930	125	185	250	210	14	8	885	215	100	620	226	394	M16	300	620	1050	897	0,58	456
DCM-G 125-1270/A/BAQE/5,5	500	810	515	535	1050	930	125	185	250	210	14		865	215	100	620	226	394	M16	300	620	1050	893	0,58	508
DCM-G 125-1560/A/BAQE/7,5	500	810	515	535	1050	930	125	185	250	210	14		905	215	100	620	226	394	M16	300	620	1050	933	0,61	507

DAB PUMPS reserves the right to make modifications without notice.

DCM-G 125 4 POLES - IN-LINE PUMPS

Pumped liquid temperature range: from -10 °C to +140 °C - Maximum ambient temperature: +40 °C

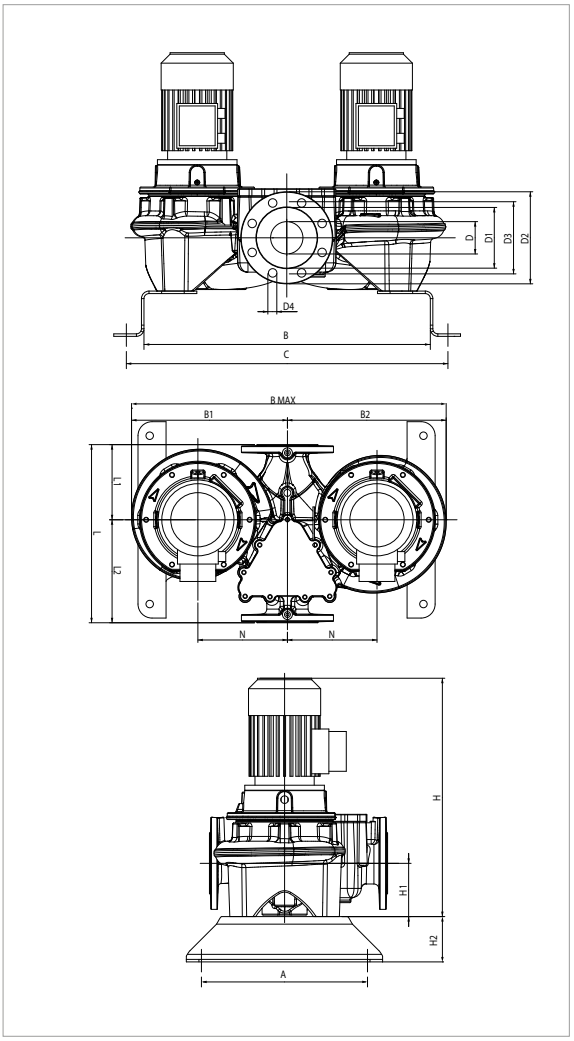

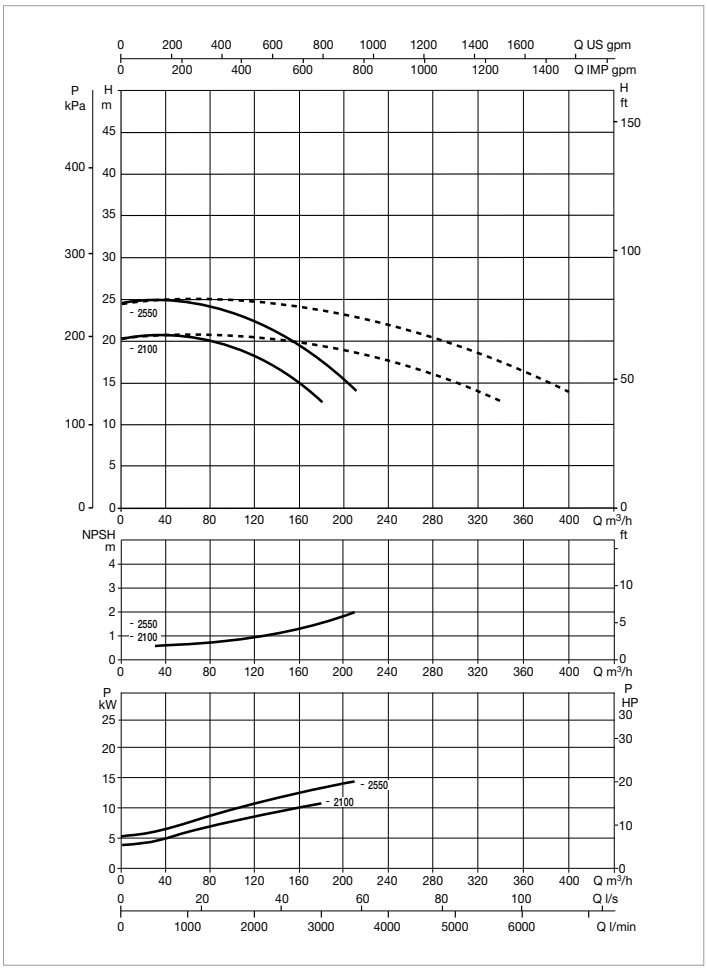

The performance curves are based on kinematic viscosity values = 1 mm^2/s and density equal to 1000 kg/m^3. Curve tolerance according to ISO 9906.

For the MEI index refer to the hydraulic data of the individual pump.

MODEL	CENTRE DISTANCE	PUMP CONNECTIONS	ELECTRICAL DATA									
			POWER INPUT 50 Hz	n r.p.m.	P1 MAX KW	P2 NOMINAL		In A		MOTOR TYPE	MOTOR SIZE	I st. A
						kW	HP	230 V	400 V			
DCM-G 125-2100/A/BAQE/11	800	DN 125	3 x 400 V ~ [1]	1475	13,6	11	15	-	22,4	IE3	MEC 160M	172,2
DCM-G 125-2550/A/BAQE/15	800	DN 125	3 x 400 V ~ [1]	1470	16,3	15	20	-	30,5	IE3	MEC 160L	232,4

[1] star start-up possible (⅄)

MODEL	A	B	B1	B2	B max	C	D	D1	D2	D3	D4	no. of holes	H	H1	H2	L	L1	L2	M	N	PACKING DIMENSIONS			VOL. (m^3)	WEIGHT Kg
																					L/A	L/B	H		
DCM-G 125-2100/A/BAQE/11	500	810	555	571	1126	930	125	185	250	210	14	8	1038	215	100	800	316	484	M16	300	800	1126	1053	0,95	737
DCM-G 125-2550/A/BAQE/15	500	810	555	571	1126	930	125	185	250	210	14		1096	215	100	800	316	484	M16	300	800	1126	1108	1	850

DCM-G 125 4 POLES - IN-LINE PUMPS

Pumped liquid temperature range: from -10 °C to +140 °C - Maximum ambient temperature: +40 °C

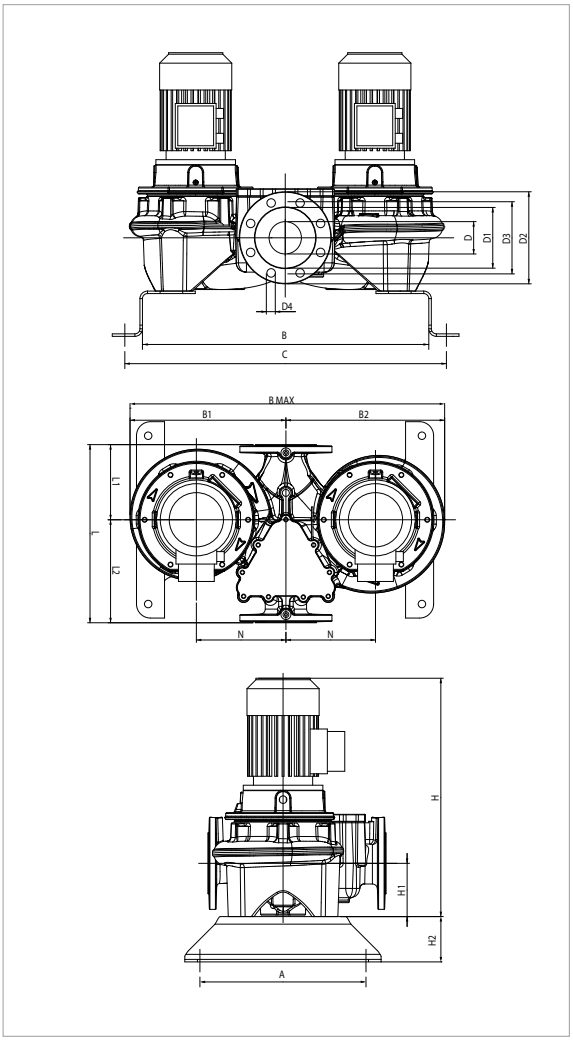

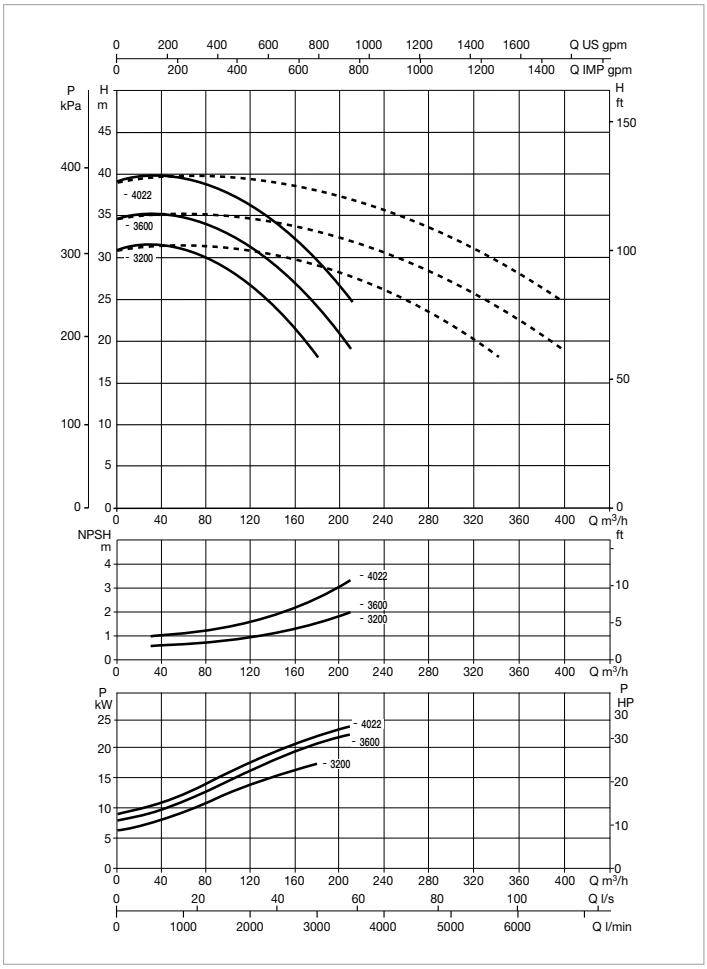

The performance curves are based on kinematic viscosity values = 1 mm^2/s and density equal to 1000 kg/m^3. Curve tolerance according to ISO 9906.

For the MEI index refer to the hydraulic data of the individual pump.

MODEL	CENTRE DISTANCE	PUMP CONNECTIONS	ELECTRICAL DATA									
			POWER INPUT 50 Hz	n r.p.m.	P1 MAX KW	P2 NOMINAL		In A		MOTOR TYPE	MOTOR SIZE	I st. A
						kW	HP	230 V	400 V			
DCM-G 125-3200/A/BAQE/18,5	800	DN 125	3 x 400 V ~ [1]	1471	17,9	18,5	25	-	34,3	IE3	MEC 180M	268,6
DCM-G 125-3600/A/BAQE/22	800	DN 125	3 x 400 V ~ [1]	1470	22,4	22	30	-	40,2	IE3	MEC 180L	336,1
DCM-G 125-4022/A/BAQE/30	800	DN 125	3 x 400 V ~ [1]	1478	26,5	30	40	-	53,7	IE3	MEC 200L	460,1

[1] star start-up possible (λ)

MODEL	A	B	B1	B2	B max	C	D	D1	D2	D3	D4	no. of holes	H	H1	H2	L	L1	L2	M	N	PACKING DIMENSIONS			VOL. (m^3)	WEIGHT Kg
																					L/A	L/B	H		
DCM-G 125-3200/A/BAQE/18,5	500	810	555	571	1126	930	125	185	250	210	14	8	1128	215	100	800	316	484	M16	300	800	1126	1128	1,02	888
DCM-G 125-3600/A/BAQE/22	500	810	555	571	1126	930	125	185	250	210	14		1166	215	100	800	316	484	M16	300	800	1126	1166	1,05	933
DCM-G 125-4022/A/BAQE/30	500	810	555	571	1126	930	125	185	250	210	14		1196	215	100	800	316	484	M16	300	800	1126	1186	1,07	1073

DCM-G 150 4 POLES - IN-LINE PUMPS

Pumped liquid temperature range: from -10 °C to +140 °C - Maximum ambient temperature: +40 °C

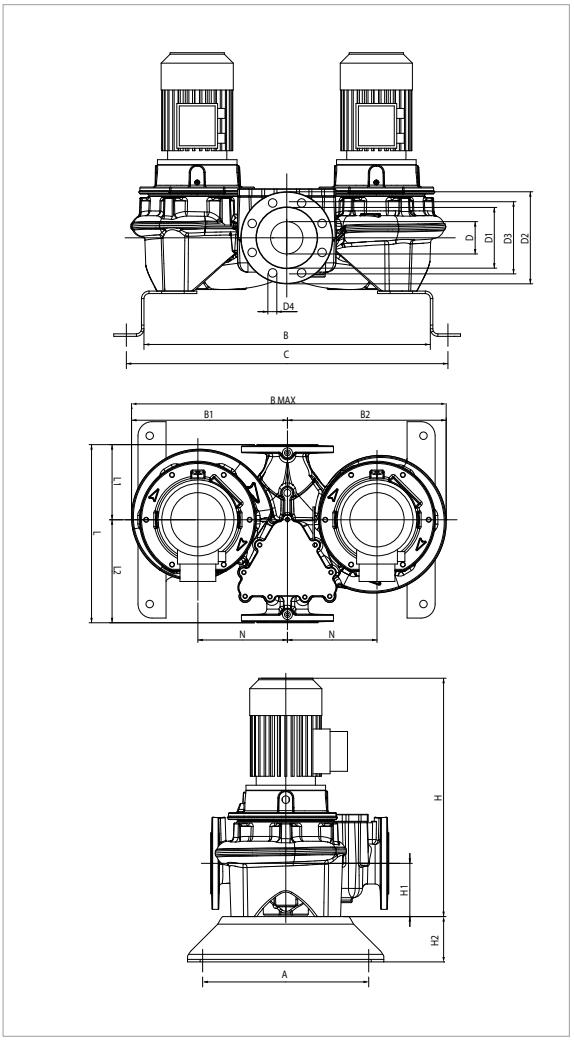

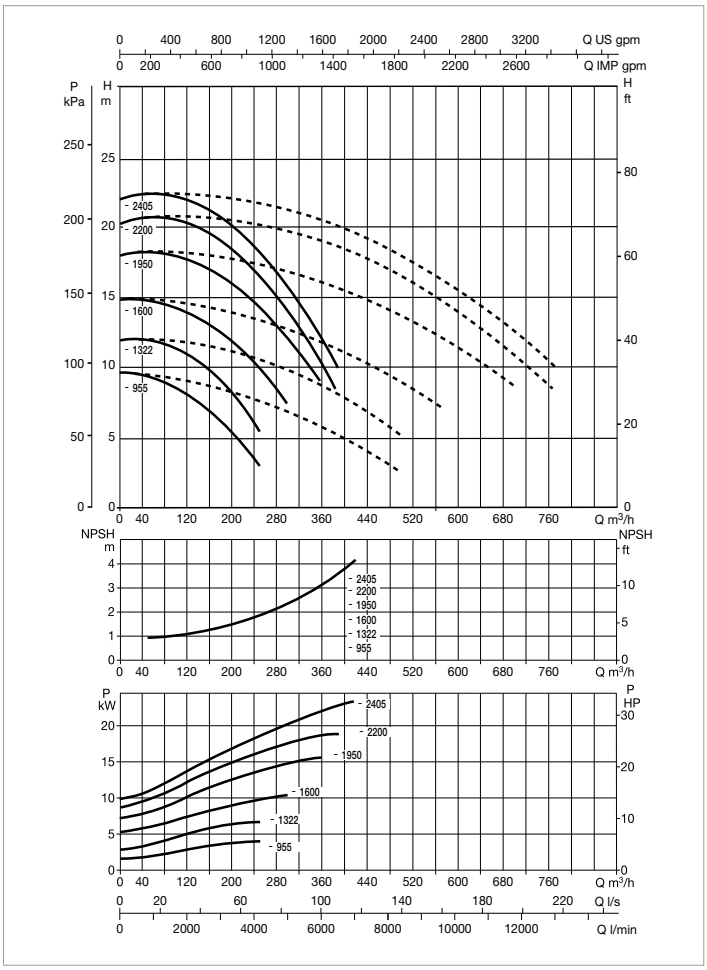

The performance curves are based on kinematic viscosity values = 1 mm^2/s and density equal to 1000 kg/m^3. Curve tolerance according to ISO 9906.

For the MEI index refer to the hydraulic data of the individual pump.

MODEL	CENTRE DISTANCE	PUMP CONNECTIONS	ELECTRICAL DATA									
			POWER INPUT 50 Hz	n r.p.m.	P1 MAX KW	P2 NOMINAL		In A		MOTOR TYPE	MOTOR SIZE	I st. A
						kW	HP	230 V	400 V			
DCM-G 150-955/A/BAQE/5,5	800	DN 150	3 x 400 V ~ [1]	1462	7,5	5,5	7,5	-	10,6	IE3	MEC 132S	92,2
DCM-G 150-1322/A/BAQE/7,5	800	DN 150	3 x 400 V ~ [1]	1464	8,9	7,5	10	-	14,4	IE3	MEC 132M	124,1
DCM-G 150-1600/A/BAQE/11	800	DN 150	3 x 400 V ~ [1]	1473	13	11	15	-	22,4	IE3	MEC 160M	172,2
DCM-G 150-1950/A/BAQE/15	800	DN 150	3 x 400 V ~ [1]	1472	17,5	15	20	-	30,5	IE3	MEC 160L	232,4
DCM-G 150-2200/A/BAQE/18,5	800	DN 150	3 x 400 V ~ [1]	1472	21,1	18,5	25	-	34,3	IE3	MEC 180M	268,6
DCM-G 150-2405/A/BAQE/22	800	DN 150	3 x 400 V ~ [1]	1470	23,8	22	30	-	40,2	IE3	MEC 180L	336,1

[1] star start-up possible (λ)

MODEL	A	B	B1	B2	B max	C	D	D1	D2	D3	D4	no. of holes	H	H1	H2	L	L1	L2	M	N	PACKING DIMENSIONS			VOL. (m^3)	WEIGHT Kg
																					L/A	L/B	H		
DCM-G 150-955/A/ BAQE/5,5	500	805	550	580	1130	925	150	210	285	240	22	8	888	215	100	800	296	504	M16	300	800	1130	916	0,83	663
DCM-G 150-1322/A/ BAQE/7,5	500	805	550	580	1130	925	150	210	285	240	22		963	215	100	800	296	504	M16	300	800	1130	956	0,86	662
DCM-G 150-1600/A/ BAQE/11	500	805	550	580	1130	925	150	210	285	240	22		1061	215	100	800	296	504	M16	300	800	1130	1061	0,96	688
DCM-G 150-1950/A/ BAQE/15	500	805	550	580	1130	925	150	210	285	240	22		1104	215	100	800	296	504	M16	300	800	1130	1116	1,01	788
DCM-G 150-2200/A/ BAQE/18,5	500	805	550	580	1130	925	150	210	285	240	22		1136	215	100	800	296	504	M16	300	800	1130	1136	1,03	796
DCM-G 150-2405/A/ BAQE/22	500	805	550	580	1130	925	150	210	285	240	22		1174	215	100	800	296	504	M16	300	800	1130	1174	1,06	930

CP / CP-G / DCP / DCP-G

IN-LINE PUMPS

TECHNICAL DATA

Operating range: from 3,6 to 420 m3/h with head of up to 102 metres.
Pumped liquid: clean, free of solids and abrasives, non-viscous, non-aggressive, non-crystallised and chemically neutral, with properties similar to water. Maximum, glycol content 30 % (for other glycol percentages contact Technical Support)
Liquid temperature range:
from -10 °C to +130 °C for DN 40 - DN 50
from -10 °C to +140 °C for the remainder of the range
Maximum ambient temperature: +40 °C
Maximum operating pressure:
PN10 : for DN 40 - DN 50
PN16 : Remainder of the range
Flanging: PN 16
Special executions on request: Other voltages and/or frequencies.
Protection: IP 55
Insulation: class F

APPLICATIONS

In-line port circulation pumps, suitable for heating, air conditioning, refrigeration and sanitary water systems.
Available in the single and twin versions.

CONSTRUCTION FEATURES

PN 10 - PN 16 flanged suction and delivery ports with threaded holes for control manometers.
Cast iron pump body and motor support, cast iron or technopolymer impeller depending on mode.
Stainless steel motor shaft.
External ventilation three-phase asynchronous motor. For its protection we recommend the use of remote overload cut-outs, in compliance with current local regulations.

MATERIALS

N.	PARTS*	MATERIALS
1	PUMP BODY	CAST IRON 250 UNI ISO 185
3	SUPPORT	CAST IRON 250 UNI ISO 185
4	IMPELLER	CAST IRON FOR DN 65-80-100-125-150 / DCP Dn 40 - 50 / CP 40-3800T, CP 40-4700T, CP 40-5500T, CP 40-6200T, CP 50-4600T, CP 50-5100T, CP 50-5650T
		TECHNOPOLYMER B FOR CP 40-1900T, CP 40-2300T, CP 40-2700T, CP 40-3500T, CP 50-2200T, CP 50-2600T, CP 50-3100T, CP 50-4100T
7	SHAFT WITH ROTOR	AISI 304 STAINLESS STEEL X5 CrNiS 1809 UNI 6900/71
16	MECHANICAL SEAL	CARBON/GRAPHITE
28	OR RING	EPDM RUBBER

* In contact with the liquid

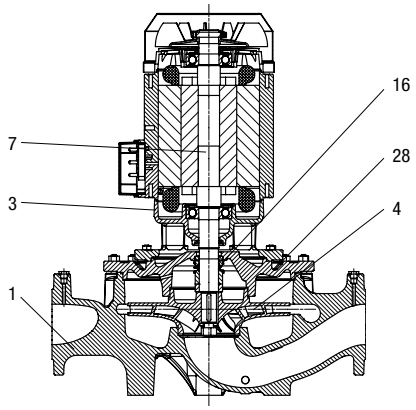

CP / CP-G / DCP / DCP-G

IN-LINE PUMS

– Denomination index:
(example)

D C M - G 65 420 A BAQE 0,25

- Single pump
D - Twin pump

Circulator

M = 4-pole motor
M = 2-pole motor

G = version with coupling

(DN) nominal diameter
of the flanged ports

Maximum head (cm)

A - Cast iron impeller
B - Bronze impeller

Mechanical seal type

Motor P2 in kW

Installation: horizontal or vertical position, provided that the motor is always above the pump.
Vertical installation only for powers exceeding 7,5 kW.

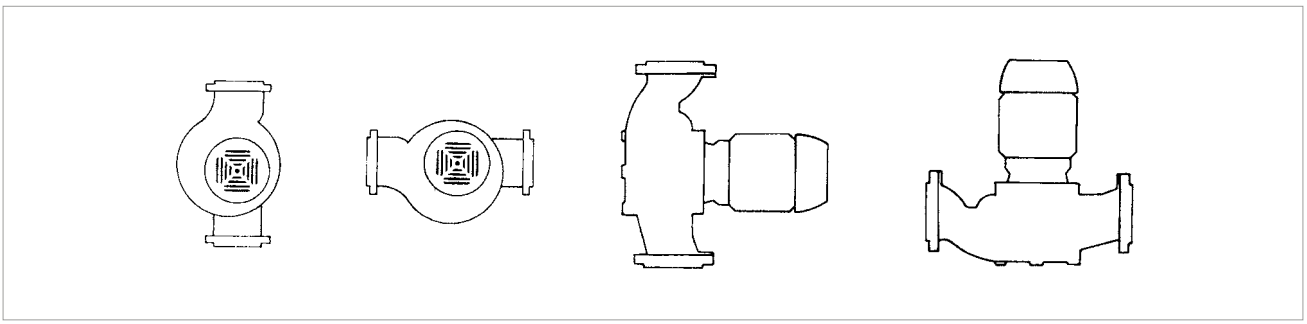

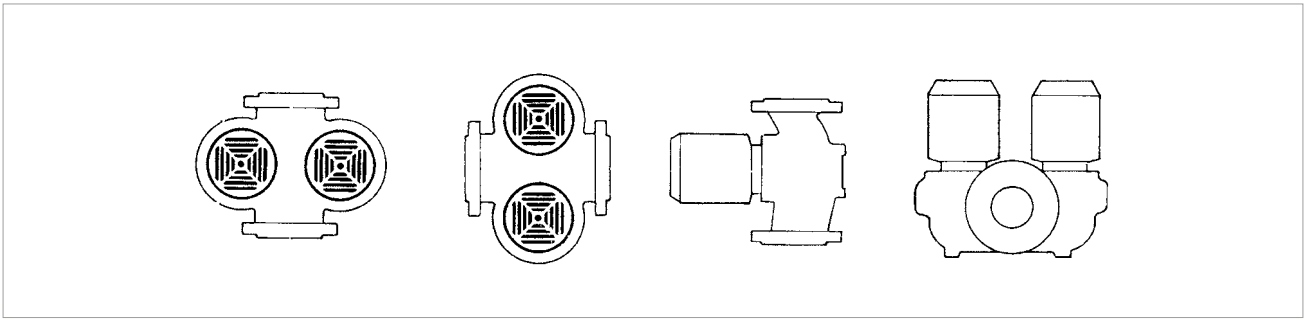

DAB PUMPS reserves the right to make modifications without notice.

PERFORMANCE RANGE

The performance curves are based on kinematic viscosity values = 1 mm²/s and density equal to 1000 kg/m³. Curve tolerance according to ISO 9906.

GRAPHIC SELECTION TABLE

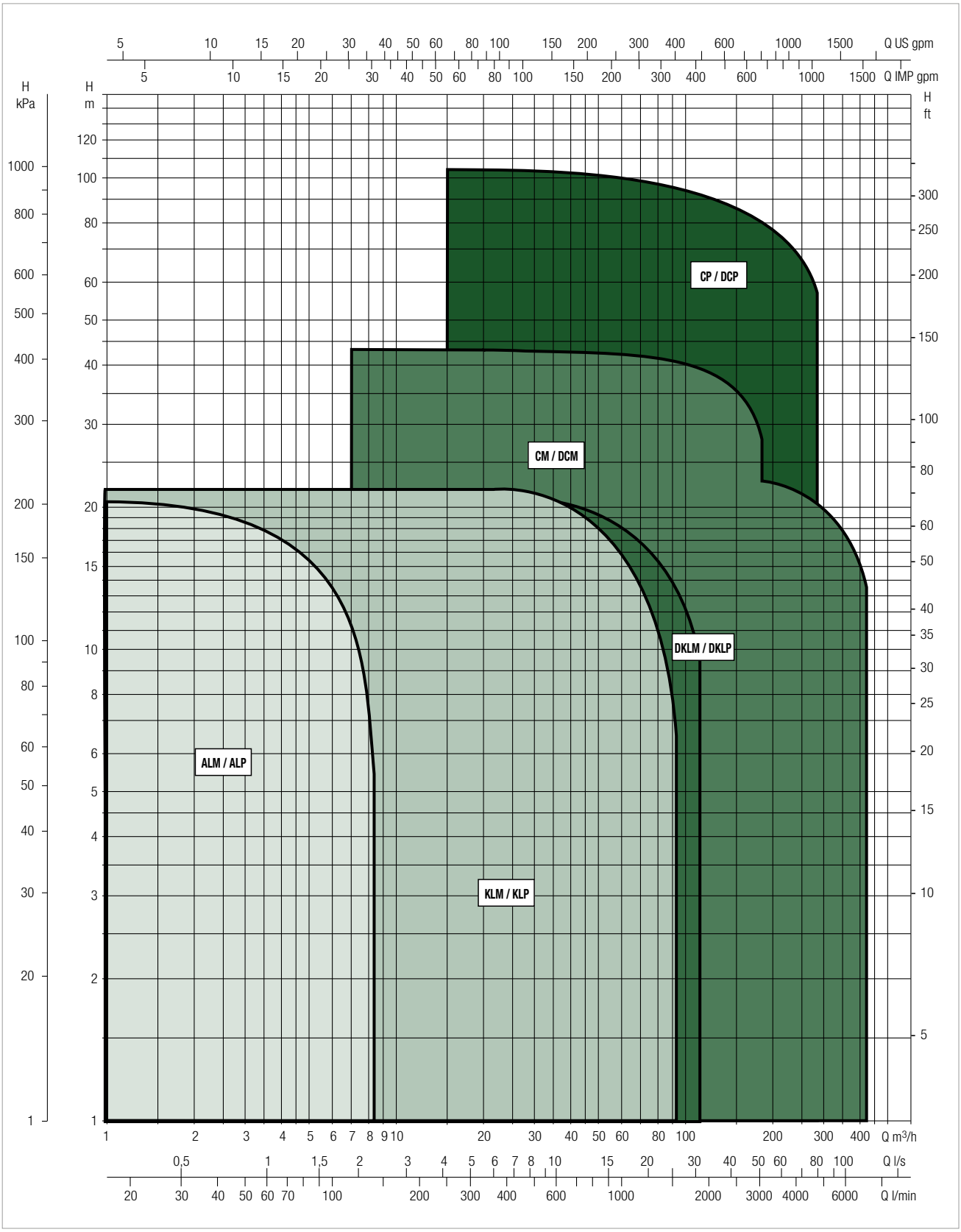

CP / CP-G / DCP / DCP-G

IN-LINE PUMPS

SELECTION TABLE - CP - 2 POLES

MODEL	Q=m³/h	0	3,6	4,8	6	12	18	24	30	36
	Q=l/min	0	60	80	100	200	300	400	500	600
CP 40/1900 T	H (m)	17,6	17,6	17,4	17	14				
CP 40/2300 T		21,8	21,8	21,3	21	18				
CP 40/2700 T		26,9	26,9	26,7	26,2	23,2				
CP 40/3500 T		34,8	34,9	34,7	34,2	31,7				
CP 40/3800 T					38	35	30			
CP 40/4700 T					47	44	39,5	35		
CP 40/5500 T					55	53	48	42		
CP 40/6200 T					62	59	54	49		

MODEL	Q=m³/h	0	3,6	4,8	6	12	18	24	30	36
	Q=l/min	0	60	80	100	200	300	400	500	600
CP 50/2200 T	H (m)				20	16,5	11			
CP 50/2600 T					25	22	16			
CP 50/3100 T					31	28,5	24			
CP 50/4100 T					40,7	38,5	34,5	27,7		
CP 50/4600 T							44	41,5	37	31
CP 50/5100 T							50	47,5	42,5	37
CP 50/5650 T							55,5	53	49	44

SELECTION TABLE - CP-G - 2 POLES

MODEL	Q=m³/h	0	6	12	18	24	30	36	42	48	54	60	66	72	78	84	90	102	114	120	150
	Q=l/min	0	100	200	300	400	500	600	700	800	900	1000	1100	1200	1300	1400	1500	1700	1900	2000	2500
CP-G 65-1470/A/BAQE/1,5	H (m)	14,7	14,5	14,3	13,8	13	11,8	10,5	8,6	7											
CP-G 65-1900/A/BAQE/2,2		19	18,7	18,4	17,8	17	15,9	14,6	13	11											
CP-G 65-2280/A/BAQE/3		22,8	22,5	22,3	22	21,2	20,2	19	17,4	15,5	13,5										
CP-G 65-2640/A/BAQE/4		26,4	26,2	26	25,6	25	24	23	21,5	19,5	17,5	15									
CP-G 65-3400/A/BAQE/5,5		34			34	33,5	32,5	31	29,5	27	24										
CP-G 65-4100/A/BAQE/7,5		41			41	41	40	39	37,5	35,5	33	30	26,5								
CP-G 65-4700/A/BAQE/11		47					45,5	45	44,3	43,3	42	40,8	39	37	35	32,3					
CP-G 65-5500/A/BAQE/15		55					56	55,5	54	53,5	52	51	49	47,5	45,5	43	41				
CP-G 65-6150/A/BAQE/18,5		61,5					62	62	61,5	60,5	59	58	56,5	55	53	51	48,5	43			
CP-G 65-7350/A/BAQE/22		73,5					75	74,5	73,8	73,5	71	68,5	67	65	62,5	60	57	49			
CP-G 65-9250/A/BAQE/30		92,5					94	94	94	93	91	89,4	87,5	85,6	83	81,5	78	72			

DAB PUMPS reserves the right to make modifications without notice.

SELECTION TABLE - CP-G - 2 POLES

MODEL	Q=m³h	0	24	30	36	42	48	54	60	66	72	78	84	90	102	114	120	150
	Q=l/min	0	400	500	600	700	800	900	1000	1100	1200	1300	1400	1500	1700	1900	2000	2500
CP-G 80-1400/A/BAQE/2,2	H (m)	14	13,8	13,3	12,9	12,5	12,1	11,4	10,8	10	9,2	8,3	7,5					
CP-G 80-1700/A/BAQE/3		17	16,5	16	15,5	15	14,5	13,7	13	12	11	10	9					
CP-G 80-2050/A/BAQE/4		20,5	20	19,5	19,1	18,5	18	17,5	16,5	15,8	14,8	14	12,5	11,5				
CP-G 80-2400/A/BAQE/5,5		24	23,6	23,5	23,2	22,8	22,2	21,5	21	20	19,1	18,5	17,5	16,5	13,4			
CP-G 80-2770/A/BAQE/7,5		27,7					27,5	27,3	27,1	26,7	25,8	25,6	24,9	24,5	23	21,2	20,1	
CP-G 80-3250/A/BAQE/11		32,5					32,2	32	31,8	31,3	30,2	30	29,2	28,7	27	24,8	23,6	
CP-G 80-4000/A/BAQE/15		40					40,2	40	39,8	39,5	39	38,5	38,2	37,5	36	34,5	33,5	26,9
CP-G 80-5150/A/BAQE/18,5		51,5					52	52	51,5	50,5	50	49	48,5	47,5	45	42,5	41	
CP-G 80-5650/A/BAQE/22		56,5					58	58	57,5	57	56,5	56	55	54,5	53	51	49	
CP-G 80-6850/A/BAQE/30		68,5					70	70	70	68,5	69	68,8	68,5	67,5	66	64	63	57
CP-G 80-8600/A/BAQE/37		86					83	82,5	82,5	82	81,5	81	80	79	76,5	73,5	72	60
CP-G 80-9600/A/BAQE/45		96					92,5	92	92	91,5	91,5	91	90	89,5	87,5	85	83	72,5
CP-G 80-10200/A/BAQE/55		102			101,6	101,5	101,3	101,1	100,7	100,3	99,7	99,1	98,3	97,4	95,4	92,9	91,5	83,2

MODEL	Q = m³h	0	36	42	48	54	60	66	72	78	84	90	102	114	120	150	180	210	240	270	300	330	360	390	420
	Q = l/min	0	600	700	800	900	1000	1100	1200	1300	1400	1500	1700	1900	2000	2500	3000	3500	4000	4500	5000	5500	6000	6500	7000
CP-G 100-1600/A/BAQE/4	H (m)	16	15	14,6	14,2	13,7	13,3	12,8	12,3	11,7	11	10	9,3	8											
CP-G 100-1950/A/BAQE/5,5		19,5	19	18,9	18,7	18,4	18,1	17,5	17,2	16,9	16,5	15,8	14,5	13	12										
CP-G 100-2350/A/BAQE/7,5		23,5	23,1	23	22,8	22,6	22,5	22	21,6	21,1	20,7	20,2	19	17,5	14,8	12									
CP-G 100-2400/A/BAQE/11		24										22	21,4	20,4	20	17,4	16,8	12							
CP-G 100-3050/A/BAQE/15		30,5										29	28,4	27,5	27	24,5	21,3	18,3							
CP-G 100-3550/A/BAQE/18,5		35,5										34,3	33,6	32,6	32,3	29,8	26,8	23,6	20						
CP-G 100-3850/A/BAQE/22		38,5										37,2	36,8	36	35,8	33,5	30,8	27,5	24						
CP-G 100-4800/A/BAQE/30		48										48,5	48,2	47,5	47	44,7	41	36	29						
CP-G 100-5600/A/BAQE/37		56										58	57,5	57,2	57	55	52	48	43						
CP-G 100-6300/A/BAQE/45		63										65,5	65	64	63	61,9	58,9	55,5	50,6	44,2					
CP-G 100-8300/A/BAQE/55		83										83,7	83,7	83,7	83,2	80,7	77,3	72,8	66,4	59,5					

MODEL	Q = m³h	0	36	42	48	54	60	66	72	78	84	90	102	114	120	150	180	210	240	270	300	330	360	390	420
	Q = l/min	0	600	700	800	900	1000	1100	1200	1300	1400	1500	1700	1900	2000	2500	3000	3500	4000	4500	5000	5500	6000	6500	7000
CP-G 125-4750/A/BAQE/37	H (m)	46,5														45	44	42	39	37	34,5	31	28		
CP-G 125-5300/A/BAQE/45		51,5														51	50	48,5	46	44	42	39	35	31,5	
CP-G 125-5800/A/BAQE/55		57,5														57	56	55	53	51	49	46	43	39	36

DAB PUMPS reserves the right to make modifications without notice.

CP / CP-G / DCP / DCP-G

IN-LINE PUMPS

SELECTION TABLE - DPC - 2 POLES

MODEL	Q=m³h	6	7,5	9	10,5	12	13,5	15	18	21	24	27	30	36	42	48	54	60	75	90	105	120	135
	Q=l/min	100	125	150	175	200	225	250	300	350	400	450	500	600	700	800	900	1000	1250	1500	1750	2000	2250
DCP 40/1250 T	H (m)	12,5	11,5	10,5	9,5	8,1	6,8	5,2															
DCP 40/1650 T		16,5	15,5	14,5	13,5	12,3	11	9,5	6														
DCP 40/2050 T		20,5	20	19	18	17	16	15	11,5	7,5													
DCP 40/2450 T		24,5	24	23,5	23	22	21	20	16,5	13													

MODEL	Q=m³h	6	7,5	9	10,5	12	13,5	15	18	21	24	27	30	36	42	48	54	60	75	90	105	120	135
	Q=l/min	100	125	150	175	200	225	250	300	350	400	450	500	600	700	800	900	1000	1250	1500	1750	2000	2250
DCP 50/1550 T	H (m)							15,5	15	14,1	13	11,8	10,5	7									
DCP 50/1900 T								19	18,5	17,5	16,5	15,5	14,5	10,5									
DCP 50/2450 T								24,5	24	23,5	23	22	20,5	17									
DCP 50/3000 T								30	29	28	26,5	25	23	18									
DCP 50/3650 T								36,5	35,5	34,5	33,5	32,5	31	27									

SELECTION TABLE - DPC-G - 2 POLES

MODEL	Q=m³h	0	6	12	18	24	30	36	42	48	54	60	66	72	78	84	90	102
	Q=l/min	0	100	200	300	400	500	600	700	800	900	1000	1100	1200	1300	1400	1500	1700
DCP-G 65-1470/A/BAQE/1,5	H (m)	14,4	14,2	13,8	13,1	12	10,6	9	7	5,3								
DCP-G 65-1900/A/BAQE/2,2		18,6	18,3	17,8	16,9	15,7	14,2	12,5	10,5	8,3								
DCP-G 65-2280/A/BAQE/3		22,3			21,1	19,9	18,4	16,8	14,7	12,5	10,2							
DCP-G 65-2640/A/BAQE/4		25,9			24,6	23,7	22,2	20,7	18,8	16,4	14	11,4						
DCP-G 65-3400/A/BAQE/5,5		33,3			32,5	31,4	29,7	27,4	25	21,7	18,2							
DCP-G 65-4100/A/BAQE/7,5		40,2			39,6	39	37,4	35,7	33,4	30,7	27,5	23,9	20,1					
DCP-G 65-4700/A/BAQE/11		46,4					44,3	43,6	42,6	41,3	39,6	38,1	35,9	33,6	31,3	28,4		
DCP-G 65-5500/A/BAQE/15		54,3					54,7	53,9	52,1	51,2	49,4	48	45,6	43,7	41,3	38,4	36,1	
DCP-G 65-6150/A/BAQE/18,5		60,8					60,7	60,4	59,7	58,4	56,5	55,2	53,3	51,4	49	46,7	43,8	37,8
DCP-G 65-7350/A/BAQE/22		72,6					73,4	72,6	71,6	70,9	68	65,1	63,2	60,7	57,8	54,9	51,5	43,1
DCP-G 65-9250/A/BAQE/30		91,4					92	91,6	91,2	89,7	87,2	85	82,5	80	76,8	74,6	70,5	63,3

DAB PUMPS reserves the right to make modifications without notice.

SELECTION TABLE - DCP-G - 2 POLES

MODEL	Q=m³h	0	24	30	36	42	48	54	60	66	72	78	84	90	102	114	120	150
	Q=l/min	0	400	500	600	700	800	900	1000	1100	1200	1300	1400	1500	1700	1900	2000	2500
DCP-G 80-1400/A/BAQE/2,2	H (m)	13,7	14,3	13,7	13	12,3	11,4	10,3	9,1	7,8	6,5	5,2	4					
DCP-G 80-1700/A/BAQE/3		16,7	17,1	16,5	15,7	14,7	13,7	12,3	11	9,4	7,8	6,2	4,8					
DCP-G 80-2050/A/BAQE/4		20,1	20,8	20,1	19,5	18,4	17,4	16,2	14,6	13,1	11,3	9,7	7,7	6,1				
DCP-G 80-2400/A/BAQE/5,5		23,5	24,5	24,4	23,9	23,1	22,1	20,8	19,6	17,9	16,3	14,8	13	11,2	7,1			
DCP-G 80-2770/A/BAQE/7,5		27,1					26,6	26	25,3	24,3	22,8	21,9	20,5	19,3	16,2	13	11,3	
DCP-G 80-3250/A/BAQE/11		31,9					31,2	30,5	29,7	28,5	26,7	25,6	24	22,6	19,1	15,2	13,2	
DCP-G 80-4000/A/BAQE/15		39,2					39,7	39,1	38,5	37,7	36,7	35,6	34,6	33,2	30,1	26,9	25,1	15,1
DCP-G 80-5150/A/BAQE/18,5		48,3					48,9	48,6	47,7	46,3	45,3	43,8	42,7	41,1	37,4	33,6	31,5	
DCP-G 80-5650/A/BAQE/22		53					54,5	54,2	53,2	52,3	51,2	50,1	48,4	47,2	44	40,3	37,7	
DCP-G 80-6850/A/BAQE/30		64,3					66,3	66,1	65,8	64,1	64,1	63,5	62,7	61,2	58,5	55,2	53,5	43,8
DCP-G 80-8600/A/BAQE/37		86,4					85,3	84,9	85,1	84,7	84,3	83,8	82,9	81,9	79,3	76,2	74,6	61,8
DCP-G 80-9600/A/BAQE/45		96,4					95,1	94,7	94,9	94,5	94,6	94,2	93,2	92,8	90,7	88,1	86	74,7
DCP-G 80-10200/A/BAQE/55		102,4			103,9	104,1	104,1	104,1	103,9	103,6	103,1	102,6	101,8	101	98,9	96,3	94,8	85,7

MODEL	Q=m³h	0	36	42	48	54	60	66	72	78	84	90	102	114	120	150	180	210	240	270
	Q=l/min	0	600	700	800	900	1000	1100	1200	1300	1400	1500	1700	1900	2000	2500	3000	3500	4000	4500
DCP-G 100-1600/A/BAQE/4	H (m)	16	15,8	15,2	14,5	13,6	12,8	11,8	10,8	9,6	8,4	7,3	5,1	3						
DCP-G 100-1950/A/BAQE/5,5		19,5	20,1	19,8	19,2	18,5	17,7	16,5	15,5	14,5	13,3	11,8	9	6	4,5					
DCP-G 100-2350/A/BAQE/7,5		23,5	24,5	24,4	24	23,6	23,1	22,2	21,4	20,4	19,4	18,3	15,7	12,9	11,7	4,5				194
DCP-G 100-2400/A/BAQE/11		23,6										21,9	21	19,7	19,1	15,5	13,4	8,2		238
DCP-G 100-3050/A/BAQE/15		30										28,9	27,9	26,5	25,8	21,8	17	12,5		313
DCP-G 100-3550/A/AQE/18,5		34,9										34,6	33,5	32,1	31,6	27,8	23,3	18,5	13,7	329
DCP-G 100-3850/A/BAQE/22		37,9										37,2	36,8	36	35,8	33,5	30,8	27,5	24	402
DCP-G 100-4800/A/BAQE/30		52,7										52,1	51,6	50,7	50	47,1	42,7	37	29,3	496
DCP-G 100-5600/A/BAQE/37		61,5										62,4	61,6	61	60,7	57,9	54,1	49,3	43,5	697
DCP-G 100-6300/A/BAQE/45		68,1										70,1	69,3	67,9	66,7	62,7	57,1	49,5		1062
DCP-G 100-8300/A/BAQE/55		77,8										79	79	79	78,5	76,1	72,7	68,2	61,8	1388

MODEL	Q=m³h	0	150	180	210	240	270	300	330	360	390	420
	Q=l/min	0	2500	3000	3500	4000	4500	500	5500	6000	6500	7000
DCP-G 125-4750/A/BAQE/37	H (m)	46,5	44,2	42	39	36	31	26	20	17		
DCP-G 125-5300/A/BAQE/45		52,2	50,3	48,4	46	42,4	39	34	29	22,4	16	
DCP-G 125-5800/A/BAQE/55		57,5	56	54	52	50	46	42	38	33	27	22

DAB PUMPS reserves the right to make modifications without notice.

CP 40 2 POLES - IN-LINE PUMPS

Pumped liquid temperature range: from -10 °C to +130 °C - Maximum ambient temperature: +40 °C

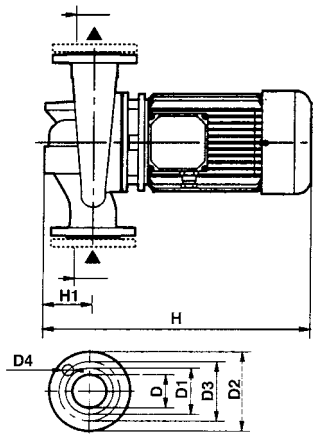

COUNTER FLANGES ON REQUEST

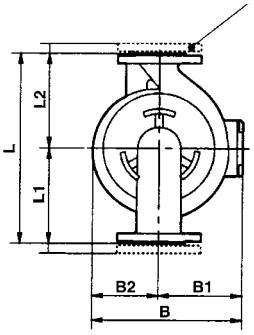

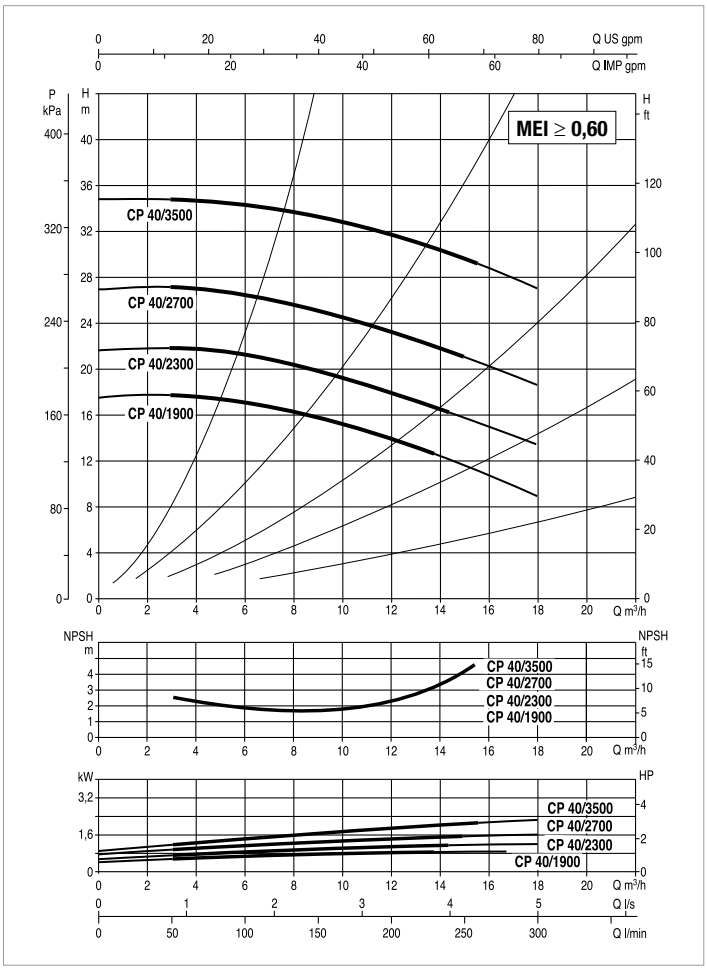

The performance curves are based on kinematic viscosity values = 1 mm^2/s and density equal to 1000 kg/m^3. Curve tolerance according to ISO 9906.

MODEL	CENTRE DISTANCE	PUMP CONNECTIONS	ELECTRICAL DATA							
			POWER INPUT 50 Hz	n r.p.m.	P1 MAX KW	P2 NOMINAL		In A		MOTOR TYPE
						kW	HP	230 V	400 V	
CP 40/1900 T	390	DN 40	3 x 230 - 400 V ~	2910	1,1	0,75	1	4,3	2,5	IE3
CP 40/2300 T	390	DN 40	3 x 230 - 400 V ~	2870	1,5	1,1	1,5	5,2	3	IE3
CP 40/2700 T	390	DN 40	3 x 230 - 400 V ~	2850	2	1,5	2	6,4	3,7	IE3
CP 40/3500 T	390	DN 40	3 x 230 - 400 V ~	2880	2,85	2,21	3	8,6	5	IE3

MODEL	B	B1	B2	D	D1	D2	D3	D4	no. of holes	H	H1	L	L1	L2	PACKING DIMENSIONS			VOL. (m^3)	WEIGHT Kg
															L/A	L/B	H		
CP 40/1900 T	231	118	113	40 PN 16	88	150	110	14	4	453	95	390	200	190	680	330	580	0,13	41
CP 40/2300 T	231	118	113	40 PN 16	88	150	110	14		453	95	390	200	190	680	330	580	0,13	41
CP 40/2700 T	231	118	113	40 PN 16	88	150	110	14		453	95	390	200	190	680	330	580	0,13	40
CP 40/3500 T	231	118	113	40 PN 16	88	150	110	14		453	95	390	200	190	680	330	580	0,13	44

CP 40 2 POLES - IN-LINE PUMPS

Pumped liquid temperature range: from -10 °C to +130 °C - Maximum ambient temperature: +40 °C

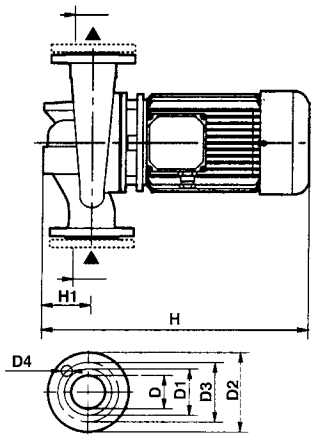

COUNTER FLANGES ON REQUEST

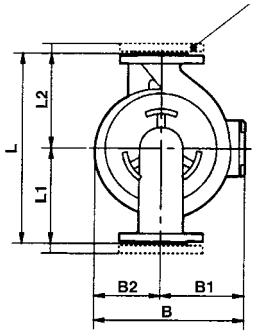

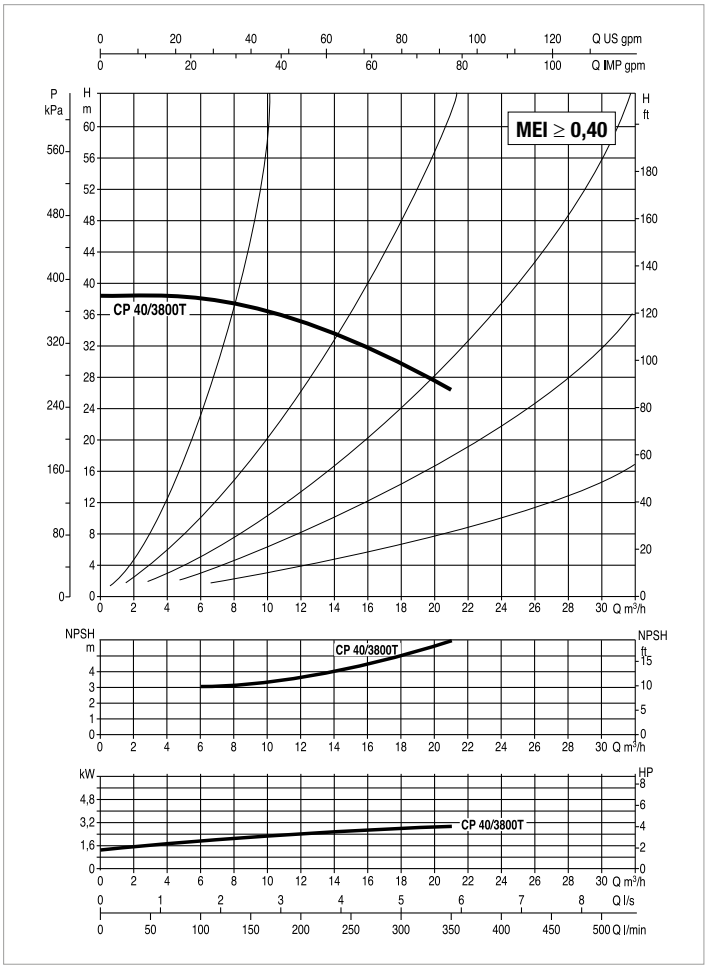

The performance curves are based on kinematic viscosity values = 1 mm^2/s and density equal to 1000 kg/m^3. Curve tolerance according to ISO 9906.

MODEL	CENTRE DISTANCE	PUMP CONNECTIONS	ELECTRICAL DATA							
			POWER INPUT 50 Hz	n r.p.m.	P1 MAX KW	P2 NOMINAL		In A		MOTOR TYPE
						kW	HP	230 V	400 V	
CP 40/3800 T	320	DN 40	3 x 230 - 400 V ~	2900	3,54	3	4	3	4	IE3

MODEL	B	B1	B2	D	D1	D2	D3	D4	no. of holes	H	H1	L	L1	L2	PACKING DIMENSIONS			VOL. (m^3)	WEIGHT Kg
															L/A	L/B	H		
CP 40/3800 T	257	149	108	40 PN 6	88	150	110	14	4	485	100	320	170	150	450	270	465	0,056	37

CP 40 2 POLES - IN-LINE PUMPS

Pumped liquid temperature range: from -10 °C to +130 °C - Maximum ambient temperature: +40 °C

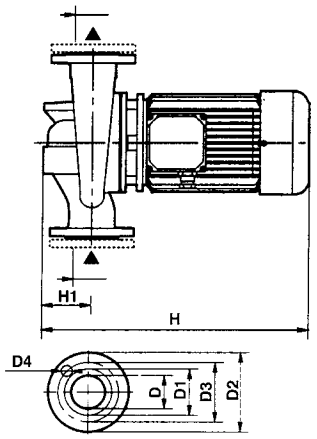

COUNTER FLANGES ON REQUEST

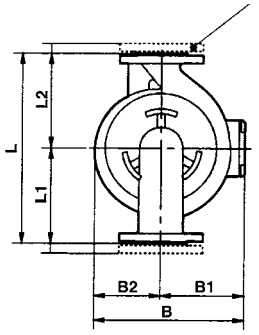

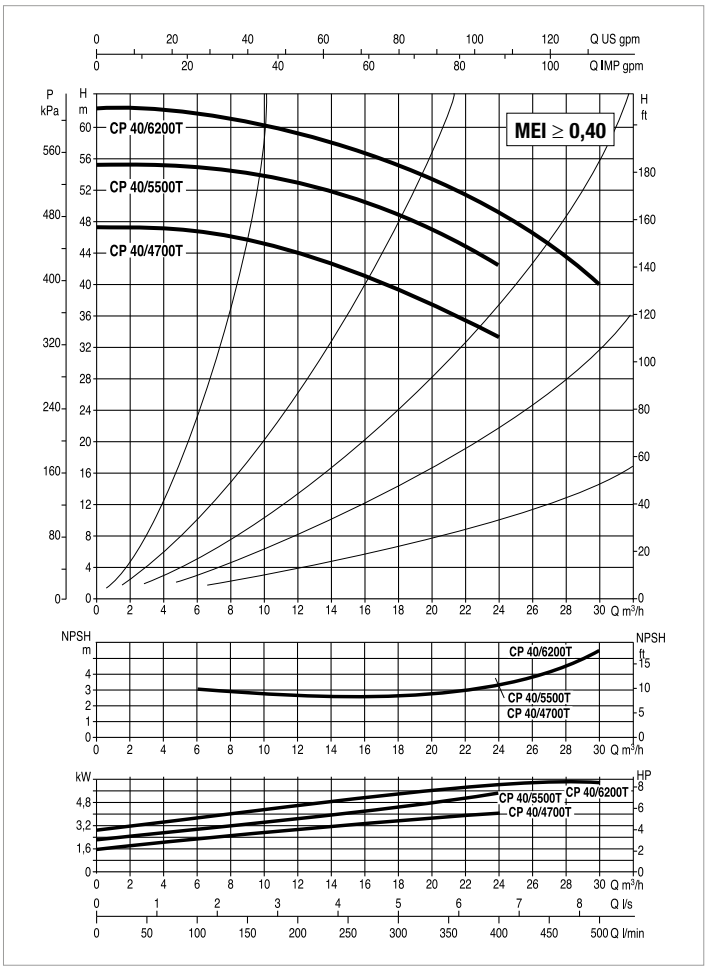

The performance curves are based on kinematic viscosity values = 1 mm^2/s and density equal to 1000 kg/m^3. Curve tolerance according to ISO 9906.

MODEL	CENTRE DISTANCE	PUMP CONNECTIONS	ELECTRICAL DATA							
			POWER INPUT 50 Hz	n r.p.m.	P1 MAX KW	P2 NOMINAL		In A		MOTOR TYPE
						kW	HP	230 V	400 V	
CP 40/4700 T	380	DN 40	3 x 230 - 400 V ~	2900	4,87	4	5,5	4	5,5	IE3
CP 40/5500 T	380	DN 40	3 x 400 V ~ [1]	2900	6,57	5,5	7,5	-	10,6	IE3
CP 40/6200 T	380	DN 40	3 x 400 V ~ [1]	2900	9,18	7,5	10	-	14,4	IE3

[1] star start-up possible (λ)

MODEL	B	B1	B2	D	D1	D2	D3	D4	no. of holes	H	H1	L	L1	L2	PACKING DIMENSIONS			VOL. (m^3)	WEIGHT Kg
															L/A	L/B	H		
CP 40/4700 T	286	159	127	40 PN 6	88	150	110	14	4	535	100	380	200	180	450	270	465	0,056	50
CP 40/5500 T	286	159	127	40 PN 6	88	150	110	14		535	100	380	200	180	450	270	465	0,056	55
CP 40/6200 T	286	159	127	40 PN 6	88	150	110	14		535	100	380	200	180	450	270	465	0,056	56

CP 50 2 POLES - IN-LINE PUMPS

Pumped liquid temperature range: from -10 °C to +140 °C - Maximum ambient temperature: +40 °C

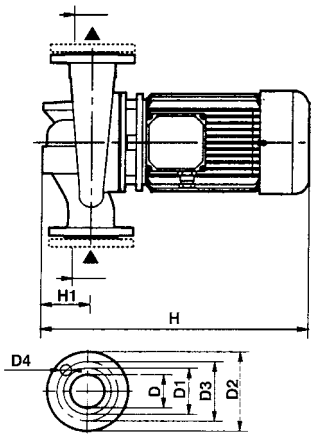

COUNTER FLANGES ON REQUEST

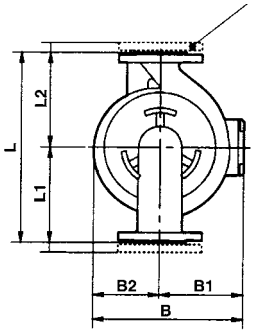

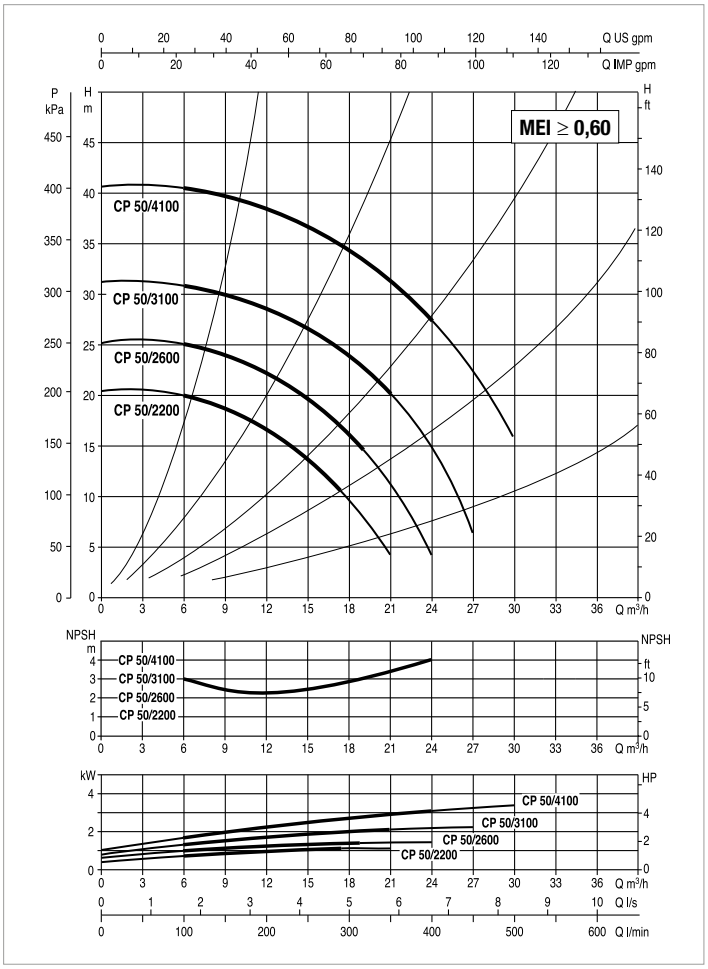

The performance curves are based on kinematic viscosity values = 1 mm^2/s and density equal to 1000 kg/m^3. Curve tolerance according to ISO 9906.

MODEL	CENTRE DISTANCE	PUMP CONNECTIONS	ELECTRICAL DATA							
			POWER INPUT 50 Hz	n r.p.m.	P1 MAX KW	P2 NOMINAL		In A		MOTOR TYPE
						kW	HP	230 V	400 V	
CP 50/2200 T	425	DN 50	3 x 230 - 400 V ~	2870	1,6	1,1	1,5	5,4	3,1	IE3
CP 50/2600 T	425	DN 50	3 x 230 - 400 V ~	2860	2	1,5	2	6,5	3,8	IE3
CP 50/3100 T	425	DN 50	3 x 230 - 400 V ~	2870	2,8	2,2	3	8,6	5	IE3
CP 50/4100 T	425	DN 50	3 x 230 - 400 V ~	2910	4,1	4	5,5	13,5	7,8	IE3

MODEL	B	B1	B2	D	D1	D2	D3	D4	no. of holes	H	H1	L	L1	L2	PACKING DIMENSIONS			VOL. (m^3)	WEIGHT Kg
															L/A	L/B	H		
CP 50/2200 T	233	120	113	50 PN 16	102	165	125	18	4	463	105	425	225	200	680	330	580	0,13	38,6
CP 50/2600 T	233	120	113	50 PN 16	102	165	125	18		463	105	425	225	200	680	330	580	0,13	39
CP 50/3100 T	233	120	113	50 PN 16	102	165	125	18		537	105	425	225	200	680	330	580	0,13	36
CP 50/4100 T	233	120	113	50 PN 16	102	165	125	18		537	105	425	225	200	680	330	580	0,13	36

DAB PUMPS reserves the right to make modifications without notice.

CP 50 2 POLES - IN-LINE PUMPS

Pumped liquid temperature range: from -10 °C to +140 °C - Maximum ambient temperature: +40 °C

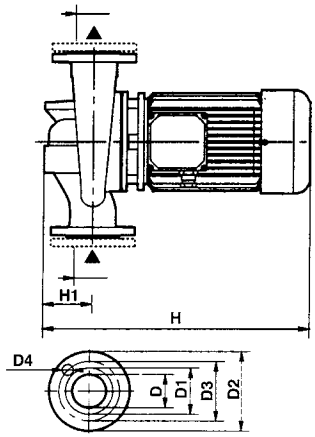

COUNTER FLANGES ON REQUEST

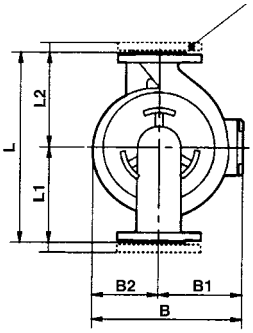

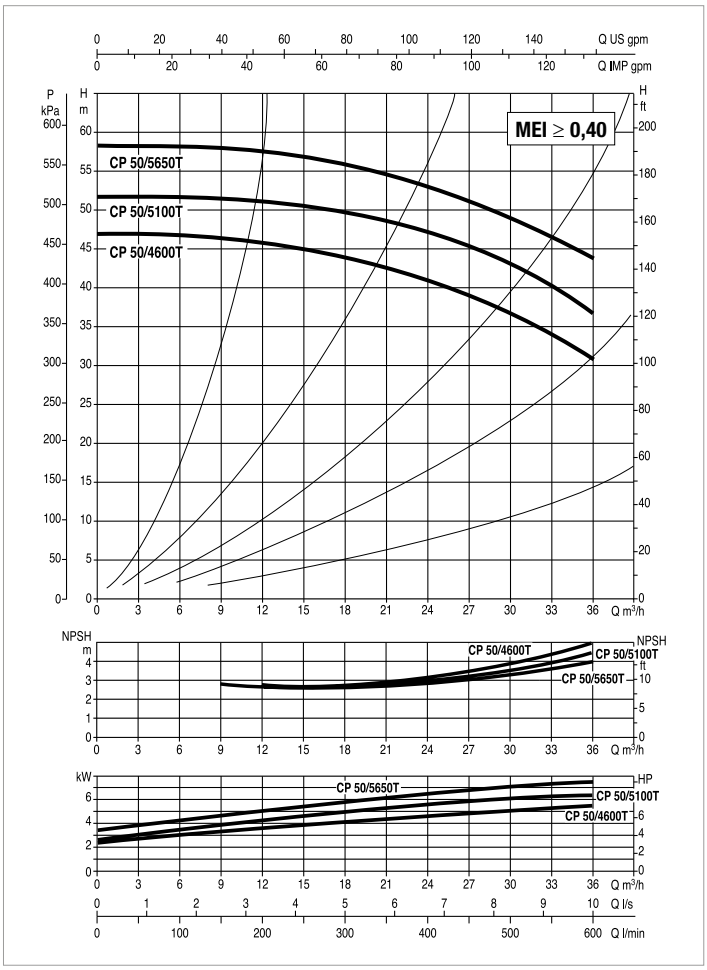

The performance curves are based on kinematic viscosity values = 1 mm^2/s and density equal to 1000 kg/m^3. Curve tolerance according to ISO 9906.

MODEL	CENTRE DISTANCE	PUMP CONNECTIONS	ELECTRICAL DATA						
			POWER INPUT 50 Hz	n r.p.m.	P1 MAX KW	P2 NOMINAL		In A	MOTOR TYPE
						kW	HP	400 V	
CP 50/4600 T	400	DN 50	3 x 400 V ~ [1]	2900	6,57	5,5	7,5	10,6	IE3
CP 50/5100 T	400	DN 50	3 x 400 V ~ [1]	2900	9,18	7,5	10	14,4	IE3
CP 50/5650 T	400	DN 50	3 x 400 V ~ [1]	2900	9,18	7,5	10	14,4	IE3

[1] star start-up possible (⅄)

MODEL	B	B1	B2	D	D1	D2	D3	D4	no. of holes	H	H1	L	L1	L2	PACKING DIMENSIONS			VOL. (m^3)	WEIGHT Kg
															L/A	L/B	H		
CP 50/4600 T	290	159	131	50 PN 10	102	165	125	18	4	545	110	400	220	180	520	320	535	0,089	46
CP 50/5100 T	290	159	131	50 PN 10	102	165	125	18		545	110	400	220	180	520	320	535	0,089	46,1
CP 50/5650 T	290	159	131	50 PN 10	102	165	125	18		545	110	400	220	180	520	320	535	0,089	57,9

CP-G 65 2 POLES - IN-LINE PUMPS

Pumped liquid temperature range: from -10 °C to +140 °C - Maximum ambient temperature: +40 °C

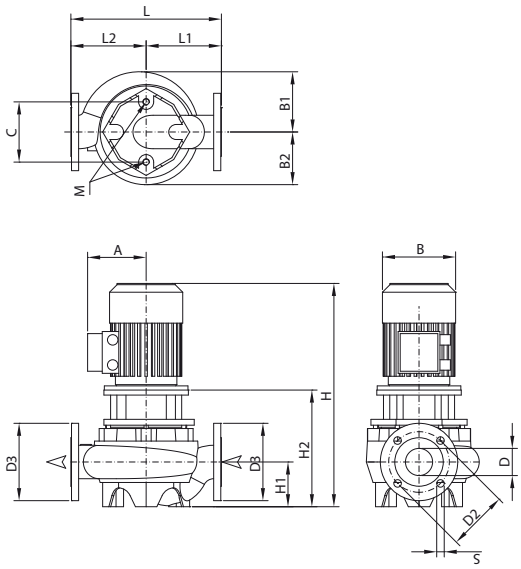

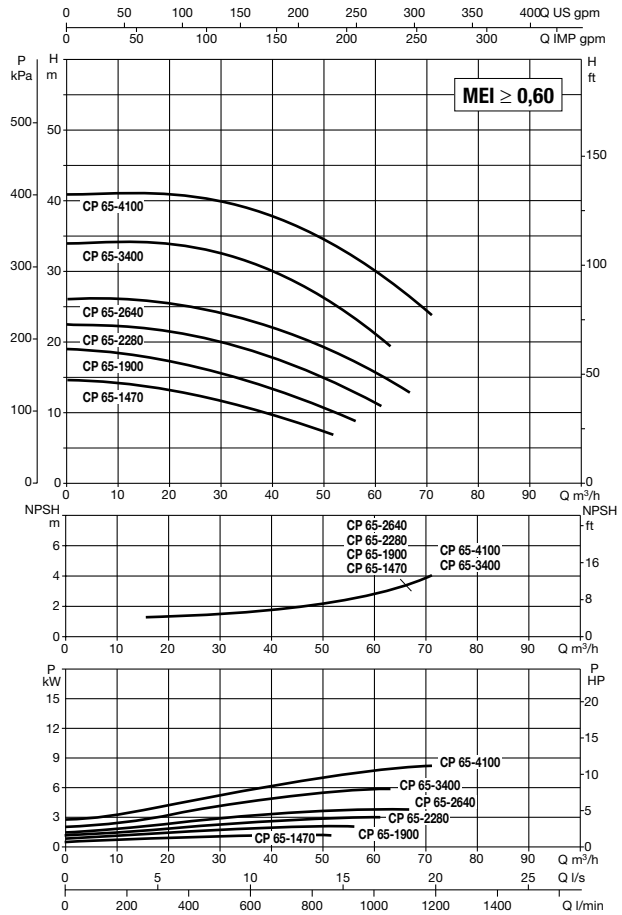

The performance curves are based on kinematic viscosity values = 1 mm^2/s and density equal to 1000 kg/m^3. Curve tolerance according to ISO 9906.

MODEL	CENTRE DISTANCE	PUMP CONNECTIONS	ELECTRICAL DATA									
			POWER INPUT 50 Hz	n r.p.m.	P1 MAX KW	P2 NOMINAL		In A		MOTOR TYPE	MOTOR SIZE	I st. A
						kW	HP	230 V	400 V			
CP-G 65-1470/A/BAQE/1,5	360	DN 65	3x230-400 V ~	2883	1,9	1,5	2	5,2	3	IE3	MEC 90S	43,6/25,2
CP-G 65-1900/A/BAQE/2,2	360	DN 65	3x230-400 V ~	2872	3,1	2,2	3	7,97	4,6	IE3	MEC 90L	73,3/42,3
CP-G 65-2280/A/BAQE/3	360	DN 65	3 x 400 V ~ [1]	2882	3,4	3	4	-	5,6	IE3	MEC 100L	49,3
CP-G 65-2640/A/BAQE/4	360	DN 65	3 x 400 V ~ [1]	2910	4,7	4	5,5	-	8,2	IE3	MEC 112M	89,3
CP-G 65-3400/A/BAQE/5,5	360	DN 65	3 x 400 V ~ [1]	2913	6,6	5,5	7,5	-	10,2	IE3	MEC 132S	114,2
CP-G 65-4100/A/BAQE/7,5	360	DN 65	3 x 400 V ~ [1]	2900	8,6	7,5	10	-	14,4	IE3	MEC 132S	113,9

[1] star start-up possible (λ)

MODEL	A	B1	B2	C	D	D2	D3	S	no. of holes	H	H1	H2	L	L1	L2	M	PACKING DIMENSIONS			VOL. (m^3)	WEIGHT Kg
																	L/A	L/B	H		
CP-G 65-1470/A/BAQE/1,5	130	144	126	144	65	145	185	18	4	557	107	279	360	180	180	M16	680	430	834	0,244	57
CP-G 65-1900/A/BAQE/2,2	130	144	126	144	65	145	185	18		583	107	279	360	180	180	M16	680	430	834	0,244	58
CP-G 65-2280/A/BAQE/3	147	144	126	144	65	145	185	18		653	107	307	360	180	180	M16	680	430	834	0,244	68
CP-G 65-2640/A/BAQE/4	169	144	126	144	65	145	185	18		635	107	307	360	180	180	M16	680	430	1084	0,317	68
CP-G 65-3400/A/BAQE/5,5	188	151	151	144	65	145	185	18		716	107	346	360	180	180	M16	680	430	1084	0,317	80
CP-G 65-4100/A/BAQE/7,5	188	151	151	144	65	145	185	18		783	107	346	360	180	180	M16	680	430	1084	0,317	87

DAB PUMPS reserves the right to make modifications without notice.

CP-G 65 2 POLES - IN-LINE PUMPS

Pumped liquid temperature range: from -10 °C to +140 °C - Maximum ambient temperature: +40 °C

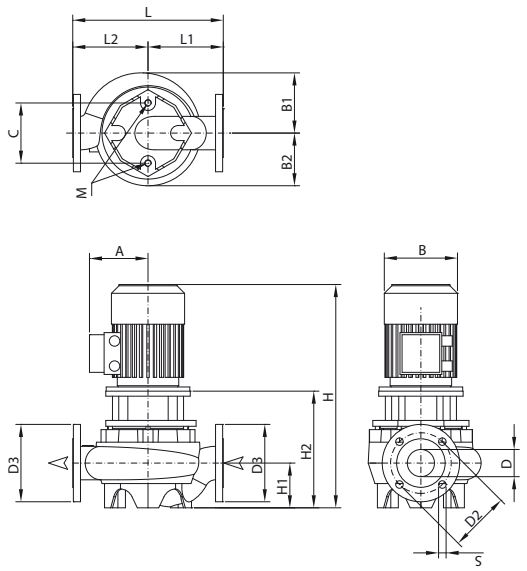

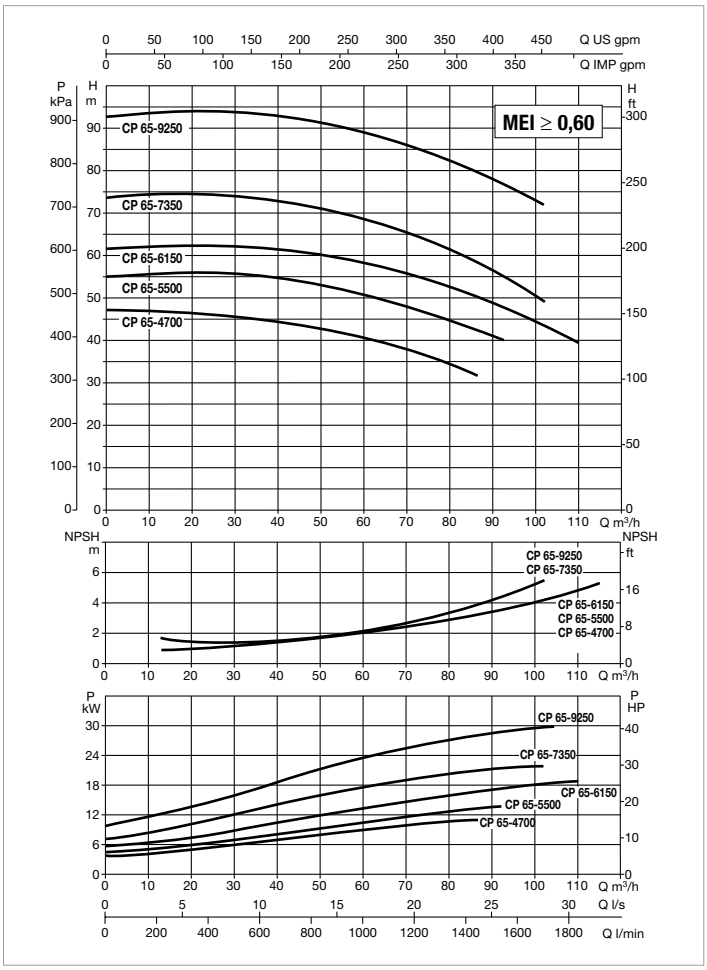

The performance curves are based on kinematic viscosity values = 1 mm^2/s and density equal to 1000 kg/m^3. Curve tolerance according to ISO 9906.

MODEL	CENTRE DISTANCE	PUMP CONNECTIONS	ELECTRICAL DATA								
			POWER INPUT 50 Hz	n r.p.m.	P1 MAX KW	P2 NOMINAL		In A	MOTOR TYPE	MOTOR SIZE	I st. A
						kW	HP	400 V			
CP-G 65-4700/A/ BAQE/11	475	DN 65	3 x 400 V ~ [1]	2940	14,1	11	15	19,9	IE3	MEC 160M	147,4
CP-G 65-5500/A/ BAQE/15	475	DN 65	3 x 400 V ~ [1]	2943	17,2	15	20	26,8	IE3	MEC 160M	204
CP-G 65-6150/A/ BAQE/18,5	475	DN 65	3 x 400 V ~ [1]	2947	21,8	18,5	25	33	IE3	MEC 160L	262,4
CP-G 65-7350/A/ BAQE/22	475	DN 65	3 x 400 V ~ [1]	2961	24,1	22	30	38,1	IE3	MEC 180M	330,6
CP-G 65-9250/A/ BAQE/30	475	DN 65	3 x 400 V ~ [1]	2950	32,5	30	40	52,1	IE3	MEC 200L	468

[1] star start-up possible (⅄)

MODEL	A	B1	B2	C	D	D2	D3	S	no. of holes	H	H1	H2	L	L1	L2	M	PACKING DIMENSIONS			VOL. (m^3)	WEIGHT Kg
																	L/A	L/B	H		
CP-G 65-4700/A/ BAQE/11	242	180	176	144	65	145	185	18		893	215	388	475	237,5	237,5	M16	1200	720	720	0,622	198
CP-G 65-5500/A/ BAQE/15	242	180	176	144	65	145	185	18		893	215	388	475	237,5	237,5	M16	1200	720	720	0,622	194
CP-G 65-6150/A/ BAQE/18,5	242	180	176	144	65	145	185	18	4	937	215	388	475	237,5	237,5	M16	1200	720	720	0,622	198
CP-G 65-7350/A/ BAQE/22	260	190	190	144	65	145	185	18		968	215	388	475	237,5	237,5	M16	1200	720	720	0,622	232
CP-G 65-9250/A/ BAQE/30	292	210	210	144	65	145	185	18		1058	215	388	475	237,5	237,5	M16	1200	720	720	0,622	310

CP-G 80 2 POLES - IN-LINE PUMPS

Pumped liquid temperature range: from -10 °C to +140 °C - Maximum ambient temperature: +40 °C

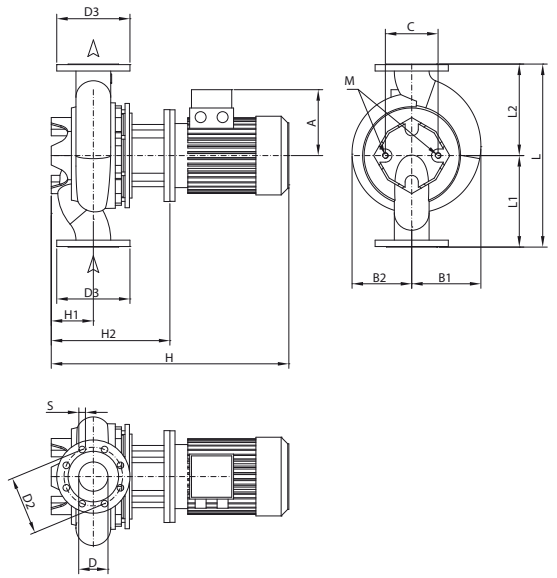

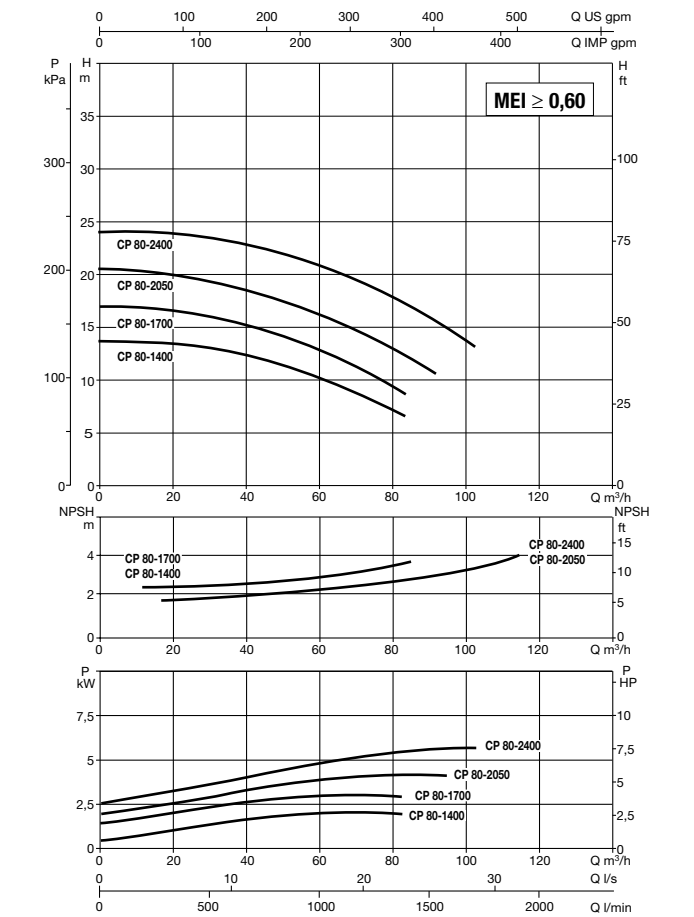

The performance curves are based on kinematic viscosity values = 1 mm^2/s and density equal to 1000 kg/m^3. Curve tolerance according to ISO 9906.

MODEL	CENTRE DISTANCE	PUMP CONNECTIONS	ELECTRICAL DATA									
			POWER INPUT 50 Hz	n r.p.m.	P1 MAX KW	P2 NOMINAL		In A		MOTOR TYPE	MOTOR SIZE	I st. A
						kW	HP	230 V	400 V			
CP-G 80-1400/A/BAQE/2,2	360	DN 80	3x230-400 V ~	2874	3	2,2	3	7,97	4,6	IE3	MEC 90L	73,3/42,3
CP-G 80-1700/A/BAQE/3	360	DN 80	3 x 400 V ~ [1]	2880	3,5	3	4	-	5,6	IE3	MEC 100L	49,3
CP-G 80-2050/A/BAQE/4	360	DN 80	3 x 400 V ~ [1]	2914	5	4	5,5	-	8,2	IE3	MEC 112M	89,3
CP-G 80-2400/A/BAQE/5,5	360	DN 80	3 x 400 V ~ [1]	2910	6,4	5,5	7,5	-	10,2	IE3	MEC 132S	114,2

[1] star start-up possible (λ)

MODEL	A	B1	B2	C	D	D2	D3	S	no. of holes	H	H1	H2	L	L1	L2	M	PACKING DIMENSIONS			VOL. (m^3)	WEIGHT Kg
																	L/A	L/B	H		
CP-G 80-1400/A/ BAQE/2,2	130	135	118	144	80	160	200	18	8	585	105	281	360	180	180	M16	680	430	834	0,244	61
CP-G 80-1700/A/ BAQE/3	147	135	125	144	80	160	200	18		655	105	309	360	180	180	M16	680	430	834	0,244	71
CP-G 80-2050/A/ BAQE/4	169	135	125	144	80	160	200	18		637	105	309	360	180	180	M16	680	430	1084	0,317	71
CP-G 80-2400/A/ BAQE/5,5	188	135	151	144	80	160	200	18		718	105	348	360	180	180	M16	680	430	1084	0,317	83

DAB PUMPS reserves the right to make modifications without notice.

CP-G 80 2 POLES - IN-LINE PUMPS

Pumped liquid temperature range: from -10 °C to +140 °C - Maximum ambient temperature: +40 °C

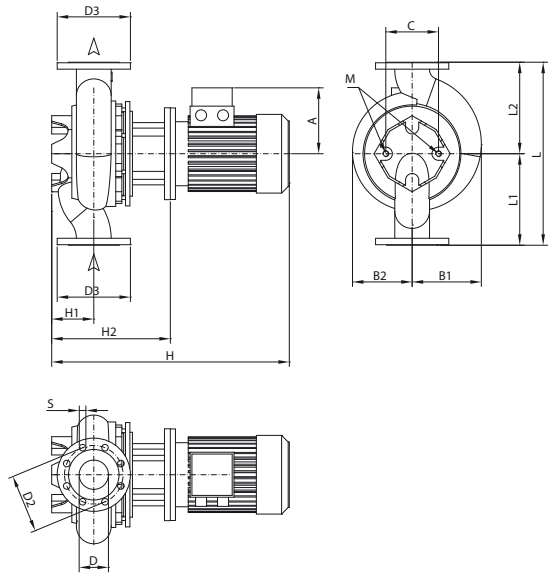

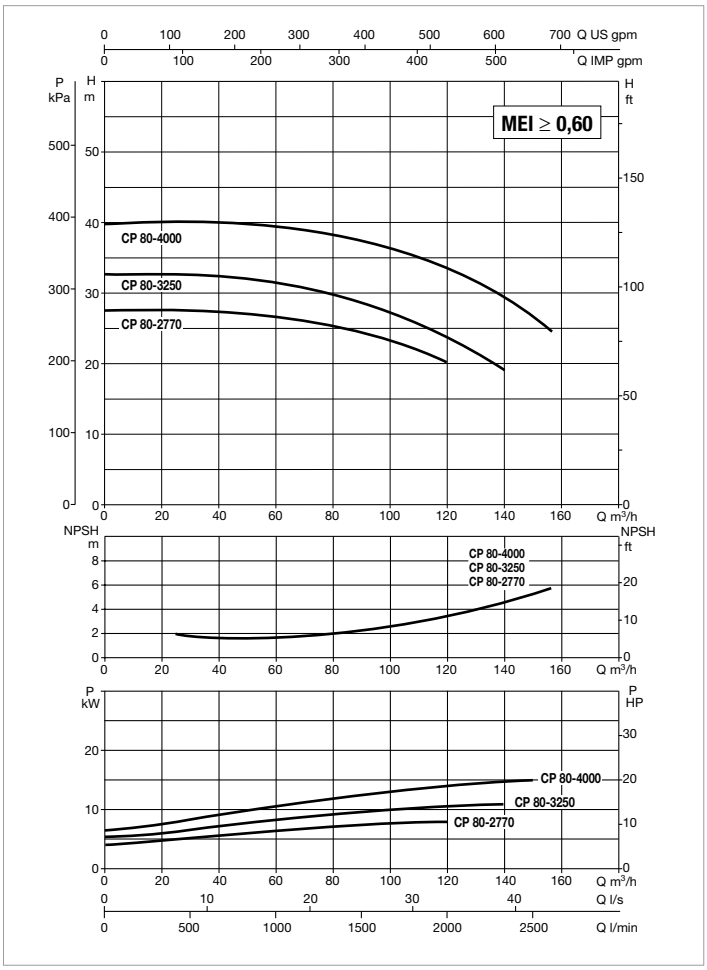

The performance curves are based on kinematic viscosity values = 1 mm^2/s and density equal to 1000 kg/m^3. Curve tolerance according to ISO 9906.

MODEL	CENTRE DISTANCE	PUMP CONNECTIONS	ELECTRICAL DATA								
			POWER INPUT 50 Hz	n r.p.m.	P1 MAX KW	P2 NOMINAL		In A	MOTOR TYPE	MOTOR SIZE	I st. A
						kW	HP	400 V			
CP-G 80-2770/A/BAQE/7,5	440	DN 80	3 x 400 V ~ [1]	2905	9,2	7,5	10	14,4	IE3	MEC 132S	113,9
CP-G 80-3250/A/BAQE/11	440	DN 80	3 x 400 V ~ [1]	2932	12,7	11	15	19,9	IE3	MEC 160M	147,4
CP-G 80-4000/A/BAQE/15	440	DN 80	3 x 400 V ~ [1]	2945	17,5	15	20	26,8	IE3	MEC 160M	204

[1] star start-up possible (⅄)

MODEL	A	B1	B2	C	D	D2	D3	S	no. of holes	H	H1	H2	L	L1	L2	M	PACKING DIMENSIONS			VOL. (m^3)	WEIGHT Kg
																	L/A	L/B	H		
CP-G 80-2770/A/ BAQE/7,5	188	178	151	144	80	160	200	18	8	795	115	358	440	220	220	M16	680	430	1084	0,317	91
CP-G 80-3250/A/ BAQE/11	242	178	176	144	80	160	200	18		893	115	388	440	220	220	M16	1200	720	720	0,622	196
CP-G 80-4000/A/ BAQE/15	242	178	176	144	80	160	200	18		893	115	388	440	220	220	M16	1200	720	720	0,622	167

CP-G 80 2 POLES - IN-LINE PUMPS

Pumped liquid temperature range: from -10 °C to +140 °C - Maximum ambient temperature: +40 °C

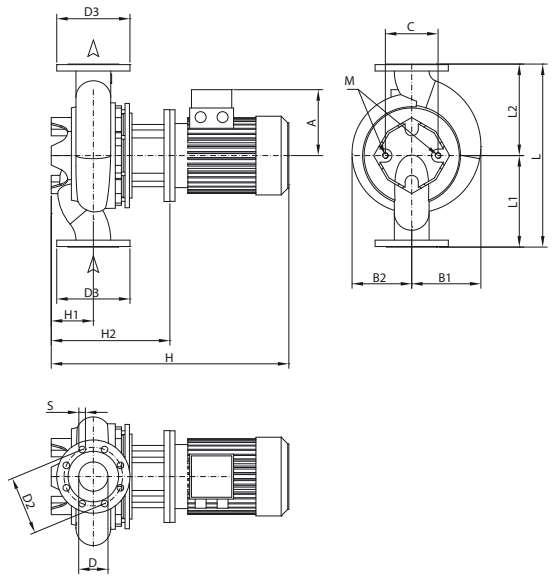

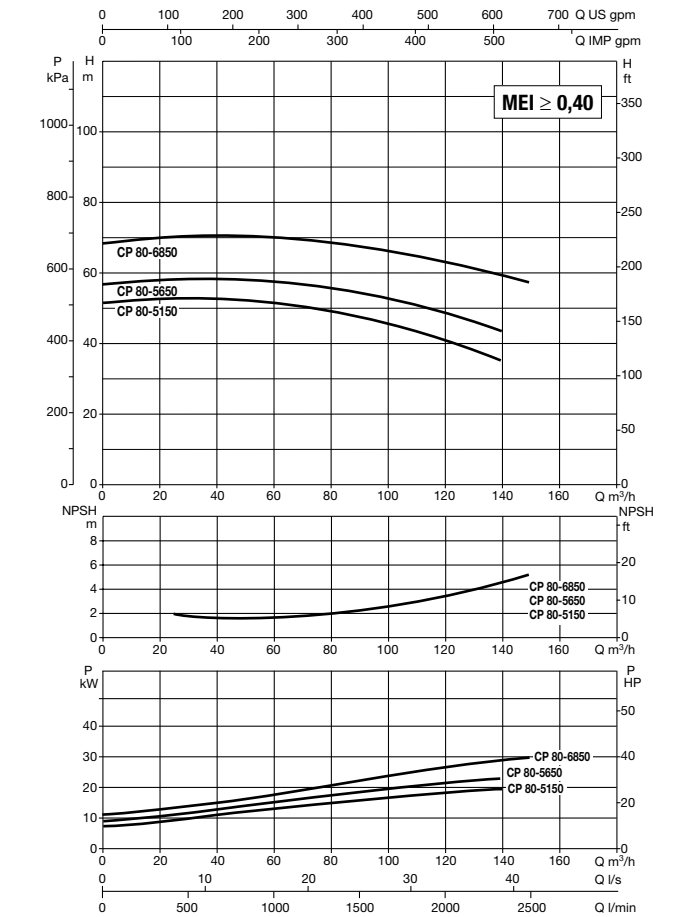

The performance curves are based on kinematic viscosity values = 1 mm^2/s and density equal to 1000 kg/m^3. Curve tolerance according to ISO 9906.

MODEL	CENTRE DISTANCE	PUMP CONNECTIONS	ELECTRICAL DATA								
			POWER INPUT 50 Hz	n r.p.m.	P1 MAX KW	P2 NOMINAL		In A	MOTOR TYPE	MOTOR SIZE	I st. A
						kW	HP	400 V			
CP-G 80-5150/A/BAQE/18,5	500	DN 80	3 x 400 V ~ [1]	2943	21	18,5	25	33	IE3	MEC 160L	262,4
CP-G 80-5650/A/BAQE/22	500	DN 80	3 x 400 V ~ [1]	2967	25,3	22	30	38,1	IE3	MEC 180M	330,6
CP-G 80-6850/A/BAQE/30	500	DN 80	3 x 400 V ~ [1]	2951	32,8	30	40	52,1	IE3	MEC 200L	468

[1] star start-up possible (λ)

MODEL	A	B1	B2	C	D	D2	D3	S	no. of holes	H	H1	H2	L	L1	L2	M	PACKING DIMENSIONS			VOL. (m^3)	WEIGHT Kg
																	L/A	L/B	H		
CP-G 80-5150/A/ BAQE/18,5	242	178	176	144	80	160	200	18	8	937	115	388	440	220	220	M16	1200	720	720	0,622	121
CP-G 80-5650/A/ BAQE/22	260	190	190	144	80	160	200	18		968	115	388	500	250	250	M16	1200	720	720	0,622	124
CP-G 80-6850/A/ BAQE/30	292	210	210	144	80	160	200	18		1050	115	380	500	250	250	M16	1200	720	720	0,622	314

DAB PUMPS reserves the right to make modifications without notice.

CP-G 80 2 POLES - IN-LINE PUMPS

Pumped liquid temperature range: from -10 °C to +140 °C - Maximum ambient temperature: +40 °C

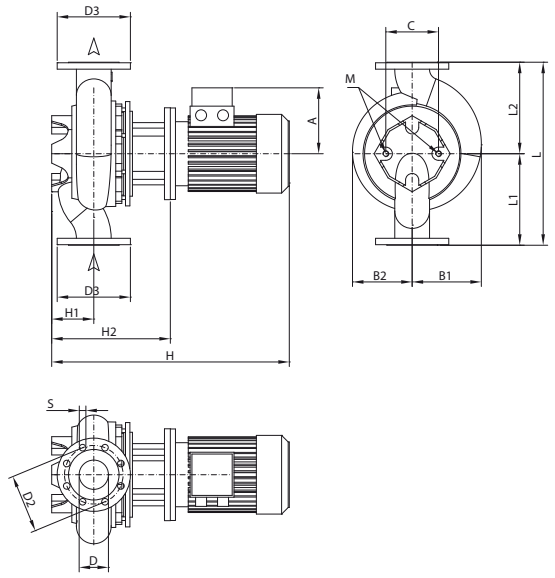

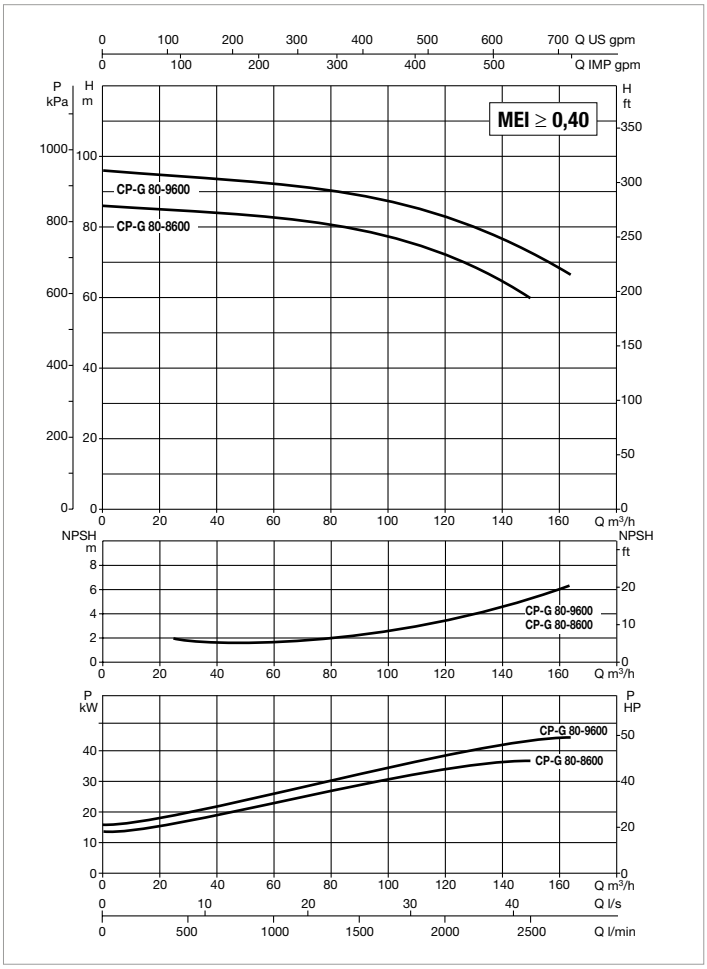

The performance curves are based on kinematic viscosity values = 1 mm^2/s and density equal to 1000 kg/m^3. Curve tolerance according to ISO 9906.

MODEL	CENTRE DISTANCE	PUMP CONNECTIONS	ELECTRICAL DATA								
			POWER INPUT 50 Hz	n r.p.m.	P1 MAX KW	P2 NOMINAL		In A	MOTOR TYPE	MOTOR SIZE	I st. A
						kW	HP	400 V			
CP-G 80-8600/A/BAQE/37	620	DN 80	3 x 400 V ~ [1]	2967	41,9	37	50	62,6	IE3	MEC 200L	567
CP-G 80-9600/A/BAQE/45	620	DN 80	3 x 400 V ~ [1]	2966	51,2	45	60	78,4	IE3	MEC 225M	630,8

[1] star start-up possible (λ)

MODEL	A	B1	B2	C	D	D2	D3	S	no. of holes	H	H1	H2	L	L1	L2	M	PACKING DIMENSIONS			VOL. (m^3)	WEIGHT Kg
																	L/A	L/B	H		
CP-G 80-8600/A/ BAQE/37	292	245	225	230	80	160	200	18	8	1113	140	445	620	310	310	M16	1200	720	720	0,622	424
CP-G 80-9600/ A/BAQE/45	315	245	232	230	80	160	200	18		1158	140	445	620	310	310	M16	1200	720	720	0,622	347

DAB PUMPS reserves the right to make modifications without notice.

CP-G 80 2 POLES - IN-LINE PUMPS

Pumped liquid temperature range: from -10 °C to +140 °C - Maximum ambient temperature: +40 °C

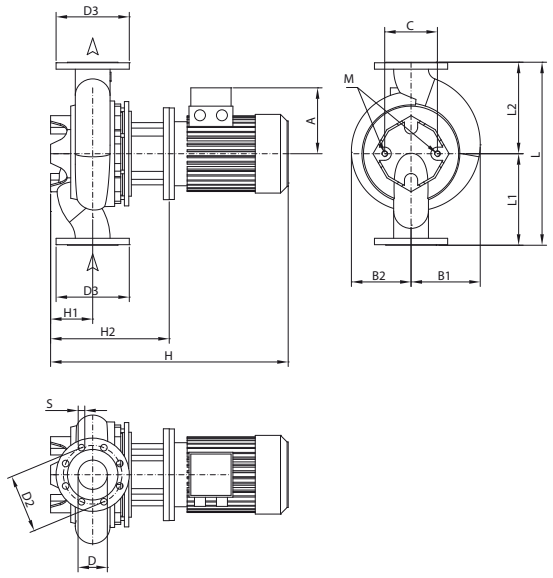

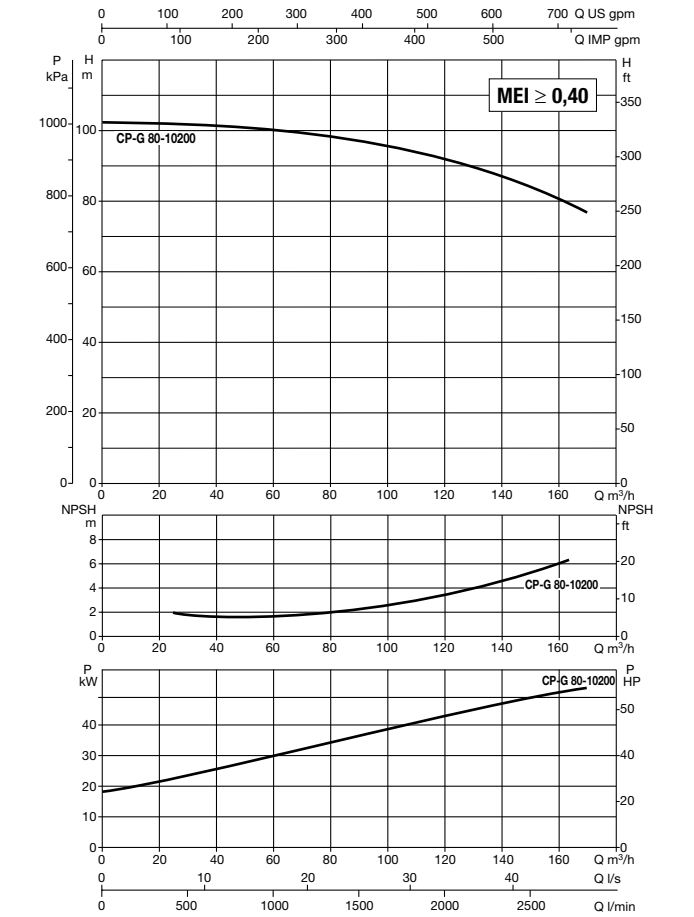

The performance curves are based on kinematic viscosity values = 1 mm^2/s and density equal to 1000 kg/m^3. Curve tolerance according to ISO 9906.

MODEL	CENTRE DISTANCE	PUMP CONNECTIONS	ELECTRICAL DATA								
			POWER INPUT 50 Hz	n r.p.m.	P1 MAX KW	P2 NOMINAL		In A	MOTOR TYPE	MOTOR SIZE	I st. A
						kW	HP	400 V			
CP-G 80-10200/A/BAQE/55	620	DN 80	3 x 400 V ~ [1]	2979	63,2	55	75	94,6	IE3	MEC 250M	684

[1] star start-up possible (λ)

MODEL	A	B1	B2	C	D	D2	D3	S	no. of holes	H	H1	H2	L	L1	L2	M	PACKING DIMENSIONS			VOL. (m^3)	WEIGHT Kg
																	L/A	L/B	H		
CP-G 80-10200/ A/BAQE/55	372	275	275	230	80	160	200	18	8	1248	140	473	620	310	310	M16	2550	1300	1300	4,31	621

DAB PUMPS reserves the right to make modifications without notice.

CP-G 100 2 POLES - IN-LINE PUMPS

Pumped liquid temperature range: from -10 °C to +140 °C - Maximum ambient temperature: +40 °C

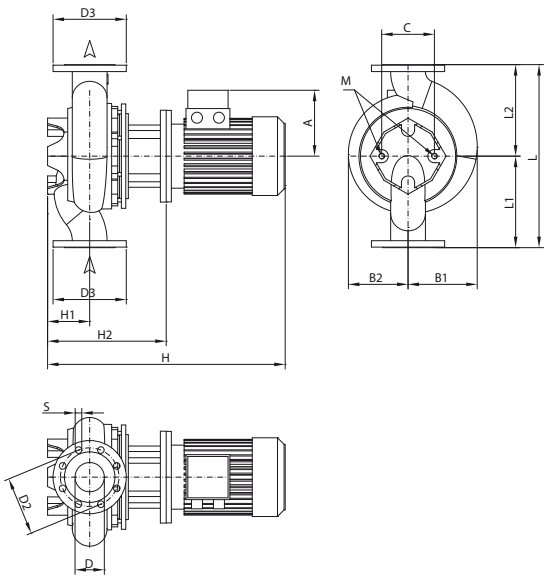

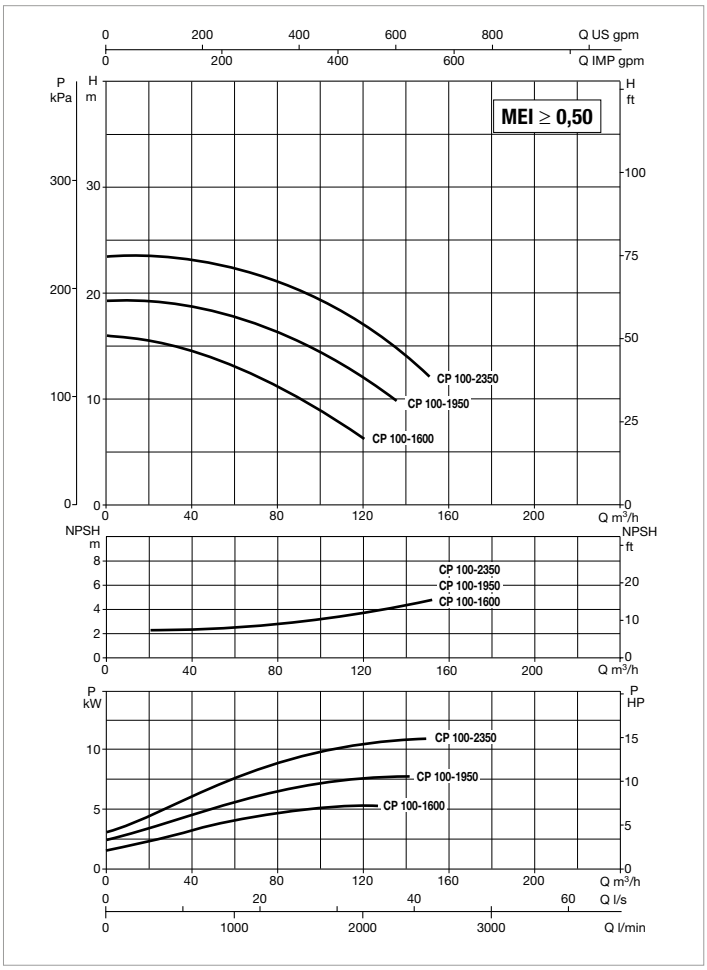

The performance curves are based on kinematic viscosity values = 1 mm^2/s and density equal to 1000 kg/m^3. Curve tolerance according to ISO 9906.

MODEL	CENTRE DISTANCE	PUMP CONNECTIONS	ELECTRICAL DATA								
			POWER INPUT 50 Hz	n r.p.m.	P1 MAX KW	P2 NOMINAL		In A	MOTOR TYPE	MOTOR SIZE	I st. A
						kW	HP	400 V			
CP-G 100-1600/A/BAQE/4	500	DN 100	3 x 400 V ~ [1]	2918	5,3	4	5,5	8,2	IE3	MEC 112M	89,3
CP-G 100-1950/ A/BAQE/5,5	500	DN 100	3 x 400 V ~ [1]	2918	7	5,5	7,5	10,2	IE3	MEC 132S	114,2
CP-G 100-2350/ A/BAQE/7,5	500	DN 100	3 x 400 V ~ [1]	2906	9,2	7,5	10	14,4	IE3	MEC 132S	113,9

[1] star start-up possible (⅄)

MODEL	A	B1	B2	C	D	D2	D3	S	no. of holes	H	H1	H2	L	L1	L2	M	PACKING DIMENSIONS			VOL. (m^3)	WEIGHT Kg
																	L/A	L/B	H		
CP-G 100-1600/A/BAQE/4	169	156	126	144	100	180	220	18	8	674	140	346	500	250	250	M16	1200	720	720	0,622	64
CP-G 100-1950/ A/BAQE/5,5	169	158	150	144	100	180	220	18		775	140	385	500	250	250	M16	1200	720	720	0,622	102
CP-G 100-2350/ A/BAQE/7,5	188	158	150	144	100	180	220	18		822	140	385	500	250	250	M16	1200	720	720	0,622	89

CP-G 100 2 POLES - IN-LINE PUMPS

Pumped liquid temperature range: from -10 °C to +140 °C - Maximum ambient temperature: +40 °C

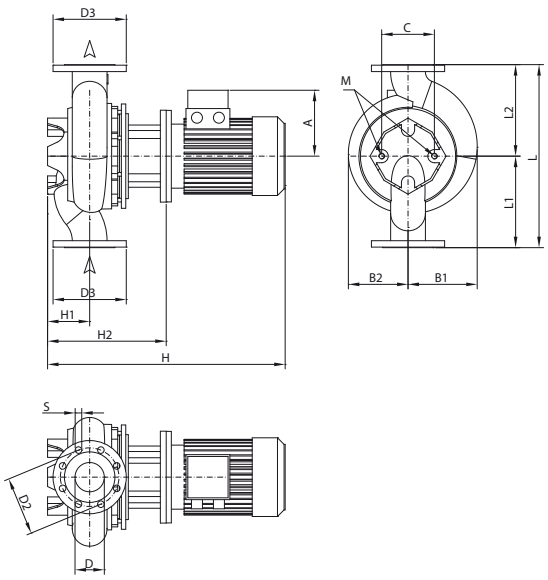

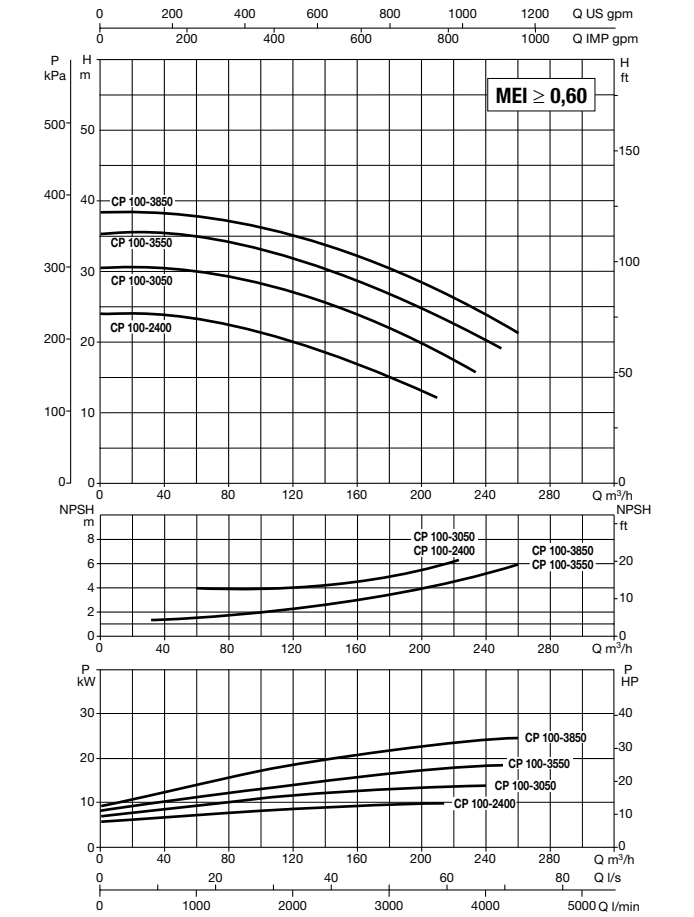

The performance curves are based on kinematic viscosity values = 1 mm^2/s and density equal to 1000 kg/m^3. Curve tolerance according to ISO 9906.

MODEL	CENTRE DISTANCE	PUMP CONNECTIONS	ELECTRICAL DATA								
			POWER INPUT 50 Hz	n r.p.m.	P1 MAX KW	P2 NOMINAL		In A	MOTOR TYPE	MOTOR SIZE	I st. A
						kW	HP	400 V			
CP-G 100-2400/A/BAQE/11	550	DN 100	3 x 400 V ~ [1]	2940	13,9	11	15	19,9	IE3	MEC 160M	147,4
CP-G 100-3050/A/BAQE/15	550	DN 100	3 x 400 V ~ [1]	2941	16,9	15	20	26,8	IE3	MEC 160M	204
CP-G 100-3550/ A/BAQE/18,5	550	DN 100	3 x 400 V ~ [1]	2948	21,9	18,5	25	33	IE3	MEC 160L	262,4
CP-G 100-3850/A/BAQE/22	550	DN 100	3 x 400 V ~ [1]	2973	26,5	22	30	38,1	IE3	MEC 180M	330,6

[1] star start-up possible (λ)

MODEL	A	B1	B2	C	D	D2	D3	S	no. of holes	H	H1	H2	L	L1	L2	M	PACKING DIMENSIONS			VOL. (m^3)	WEIGHT Kg
																	L/A	L/B	H		
CP-G 100-2400/A/BAQE/11	242	193	176	144	100	180	220	18	8	915	140	410	550	275	275	M16	1200	720	720	0,622	127
CP-G 100-3050/A/BAQE/15	242	193	176	144	100	180	220	18		915	140	410	550	275	275	M16	1200	720	720	0,622	150
CP-G 100-3550/ A/BAQE/18,5	242	193	176	144	100	180	220	18		959	140	410	550	275	275	M16	1200	720	720	0,622	146
CP-G 100-3850/A/BAQE/22	260	192	190	230	100	180	220	18		990	140	410	550	275	275	M16	1200	720	720	0,622	259

CP-G 100 2 POLES - IN-LINE PUMPS

Pumped liquid temperature range: from -10 °C to +140 °C - Maximum ambient temperature: +40 °C

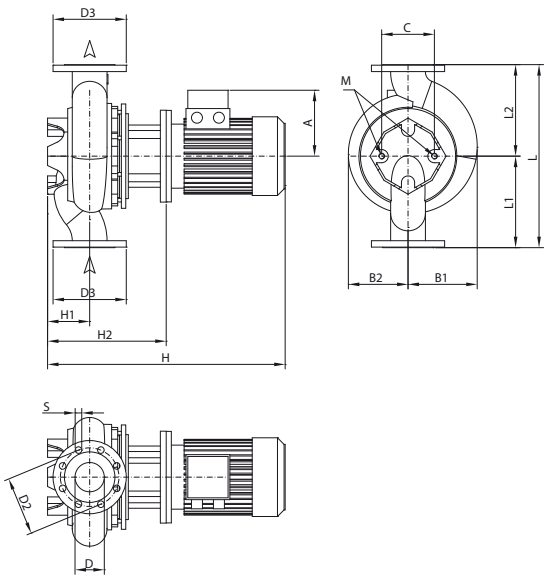

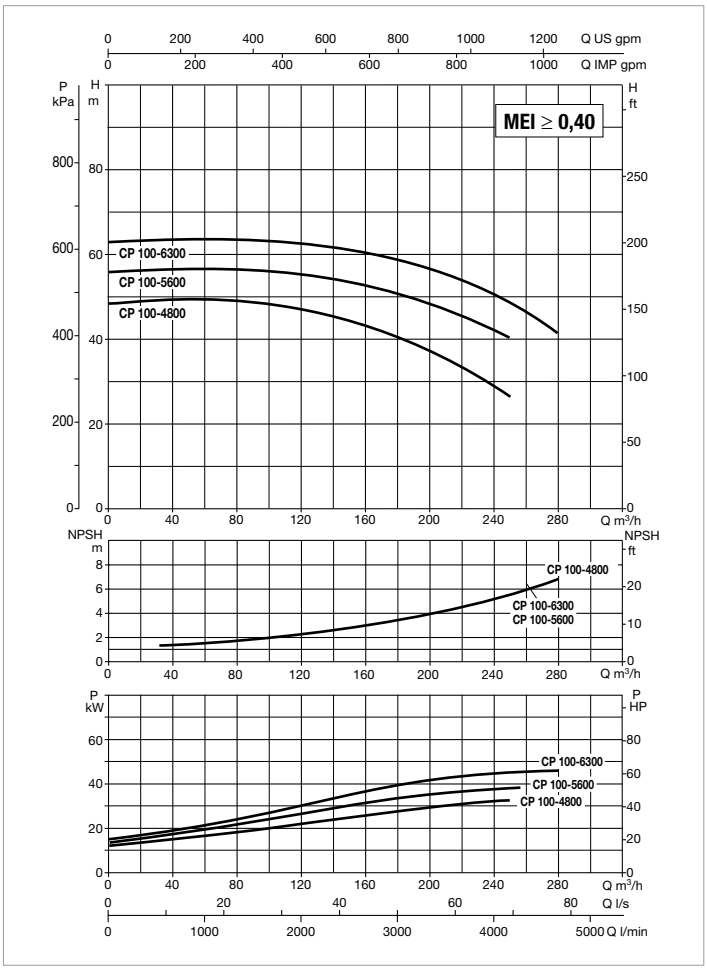

The performance curves are based on kinematic viscosity values = 1 mm^2/s and density equal to 1000 kg/m^3. Curve tolerance according to ISO 9906.

MODEL	CENTRE DISTANCE	PUMP CONNECTIONS	ELECTRICAL DATA								
			POWER INPUT 50 Hz	n r.p.m.	P1 MAX KW	P2 NOMINAL		In A	MOTOR TYPE	MOTOR SIZE	I st. A
						kW	HP	400 V			
CP-G 100-4800/A/BAQE/30	550	DN 100	3 x 400 V ~ [1]	2966	39,2	30	40	52,1	IE3	MEC 200L	468
CP-G 100-5600/A/BAQE/37	550	DN 100	3 x 400 V ~ [1]	2975	45	37	50	62,6	IE3	MEC 200L	567
CP-G 100-6300/A/BAQE/45	550	DN 100	3 x 400 V ~ [1]	2975	55,9	45	60	78,4	IE3	MEC 225M	630,8

[1] star start-up possible (λ)

MODEL	A	B1	B2	C	D	D2	D3	S	no. of holes	H	H1	H2	L	L1	L2	M	PACKING DIMENSIONS			VOL. (m^3)	WEIGHT Kg
																	L/A	L/B	H		
CP-G 100-4800/A/BAQE/30	292	210	210	230	100	180	220	18	8	1117	140	447	550	275	275	M16	1200	720	720	0,622	337
CP-G 100-5600/A/BAQE/37	292	210	210	230	100	180	220	18		1117	140	447	550	275	275	M16	1200	720	720	0,622	397
CP-G 100-6300/A/BAQE/45	315	235	235	230	100	180	220	18		1162	140	447	550	275	275	M16	1200	720	720	0,622	470

CP-G 100 2 POLES - IN-LINE PUMPS

Pumped liquid temperature range: from -10 °C to +140 °C - Maximum ambient temperature: +40 °C

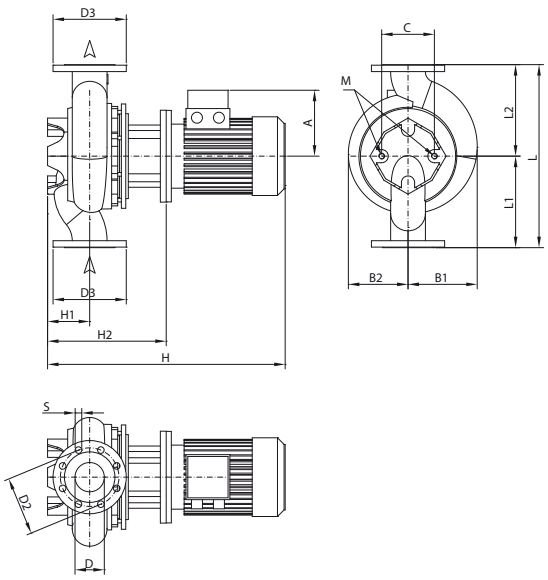

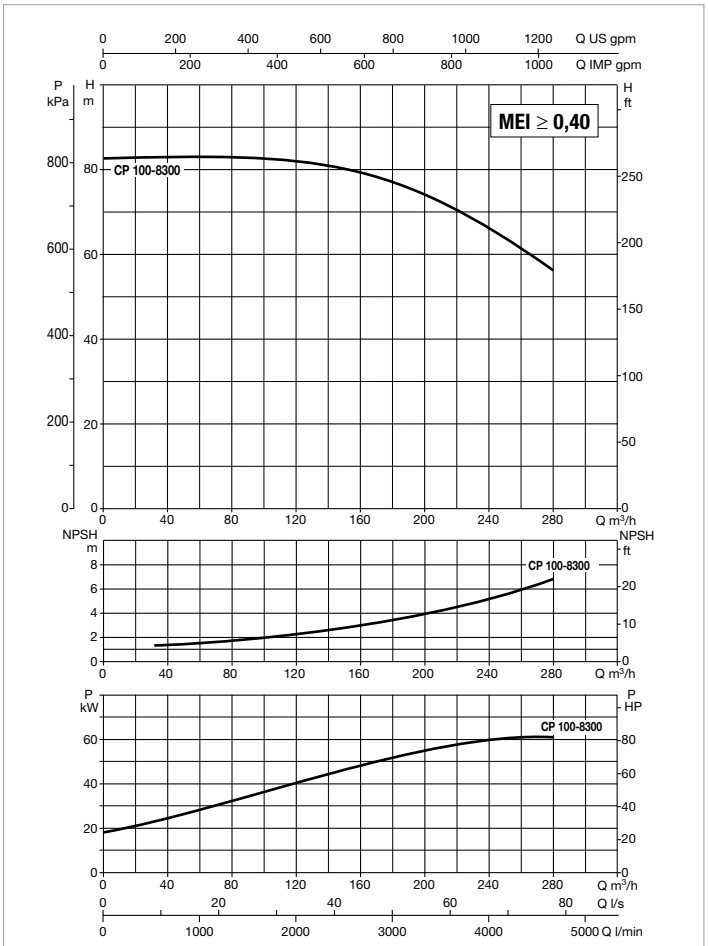

The performance curves are based on kinematic viscosity values = 1 mm^2/s and density equal to 1000 kg/m^3. Curve tolerance according to ISO 9906.

MODEL	CENTRE DISTANCE	PUMP CONNECTIONS	ELECTRICAL DATA								
			POWER INPUT 50 Hz	n r.p.m.	P1 MAX KW	P2 NOMINAL		In A	MOTOR TYPE	MOTOR SIZE	I st. A
						kW	HP	400 V			
CP-G 100-8300/A/BAQE/55	670	DN 100	3 x 400 V ~ [1]	2981	70,1	55	75	94,6	IE3	MEC 250M	684

[1] star start-up possible (λ)

MODEL	A	B1	B2	C	D	D2	D3	S	no. of holes	H	H1	H2	L	L1	L2	M	PACKING DIMENSIONS			VOL. (m^3)	WEIGHT Kg
																	L/A	L/B	H		
CP-G 100-8300/A/BAQE/55	372	293	275	230	100	180	220	18	8	1288	175	513	670	335	335	M16	1500	760	725	0,827	627

CP-G 125 2 POLES - IN-LINE PUMPS

Pumped liquid temperature range: from -10 °C to +140 °C - Maximum ambient temperature: +40 °C

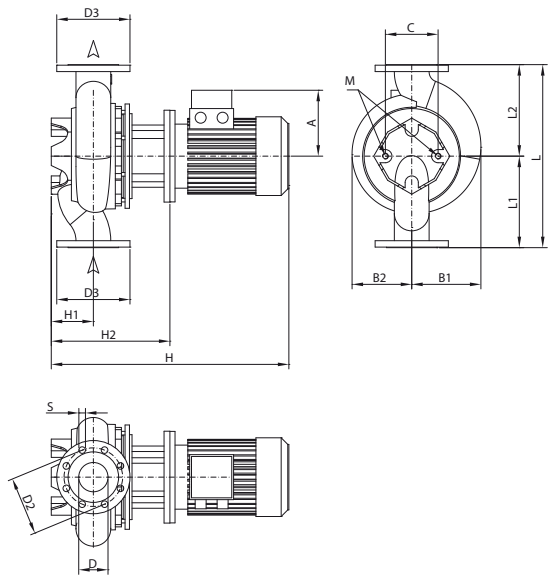

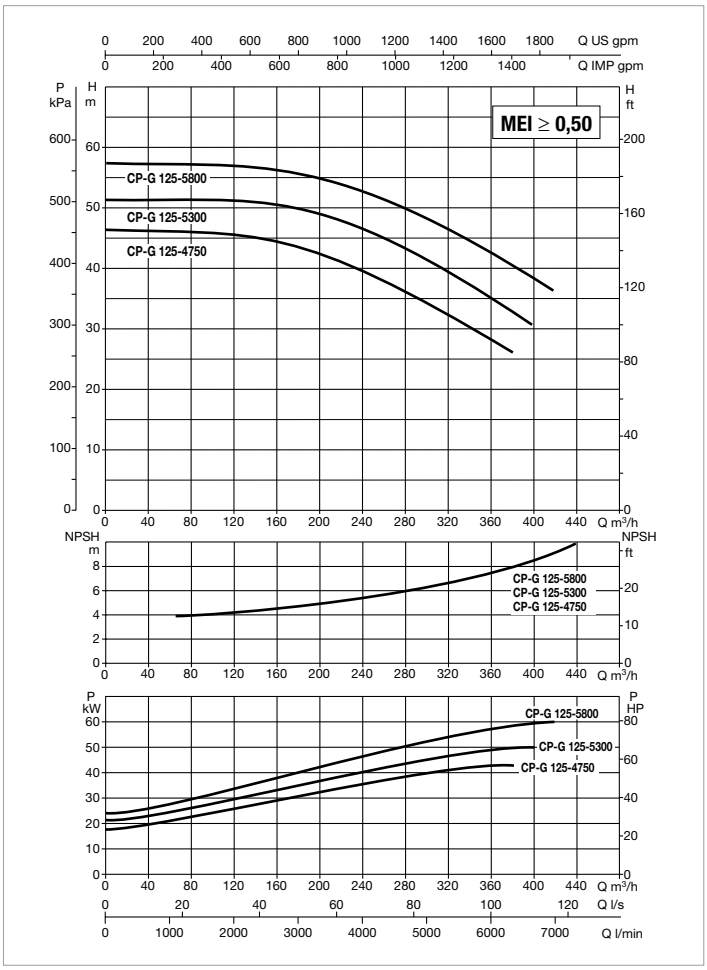

The performance curves are based on kinematic viscosity values = 1 mm^2/s and density equal to 1000 kg/m^3. Curve tolerance according to ISO 9906.

MODEL	CENTRE DISTANCE	PUMP CONNECTIONS	ELECTRICAL DATA								
			POWER INPUT 50 Hz	n r.p.m.	P1 MAX KW	P2 NOMINAL		In A	MOTOR TYPE	MOTOR SIZE	I st. A
						kW	HP	400 V			
CP-G 125-4750/A/BAQE/37	620	DN 125	3 x 400 V ~ [1]	2975	44,7	37	50	62,6	IE3	MEC 200L	567
CP-G 125-5300/A/BAQE/45	620	DN 125	3 x 400 V ~ [1]	2973	53,9	45	60	78,4	IE3	MEC 225M	630,8
CP-G 125-5800/A/BAQE/55	620	DN 125	3 x 400 V ~ [1]	2985	68,2	55	75	94,6	IE3	MEC 250M	684

[1] star start-up possible (λ)

MODEL	A	B1	B2	C	D	D2	D3	S	no. of holes	H	H1	H2	L	L1	L2	M	PACKING DIMENSIONS			VOL. (m^3)	WEIGHT Kg
																	L/A	L/B	H		
CP-G 125-4750/A/BAQE/37	292	252	210	230	125	210	250	18	8	1198	215	528	620	310	310	M16	1125	680	1300	0,995	444
CP-G 125-5300/A/BAQE/45	315	252	235	230	125	210	250	18		1243	215	528	620	310	310	M16	760	725	1500	0,827	507
CP-G 125-5800/A/BAQE/55	372	275	275	230	125	210	250	18		1333	215	558	620	310	310	M16	760	725	1500	0,827	539

DCP 40 2 POLES - IN-LINE PUMPS

Pumped liquid temperature range: from -10 °C to +130 °C - Maximum ambient temperature: +40 °C

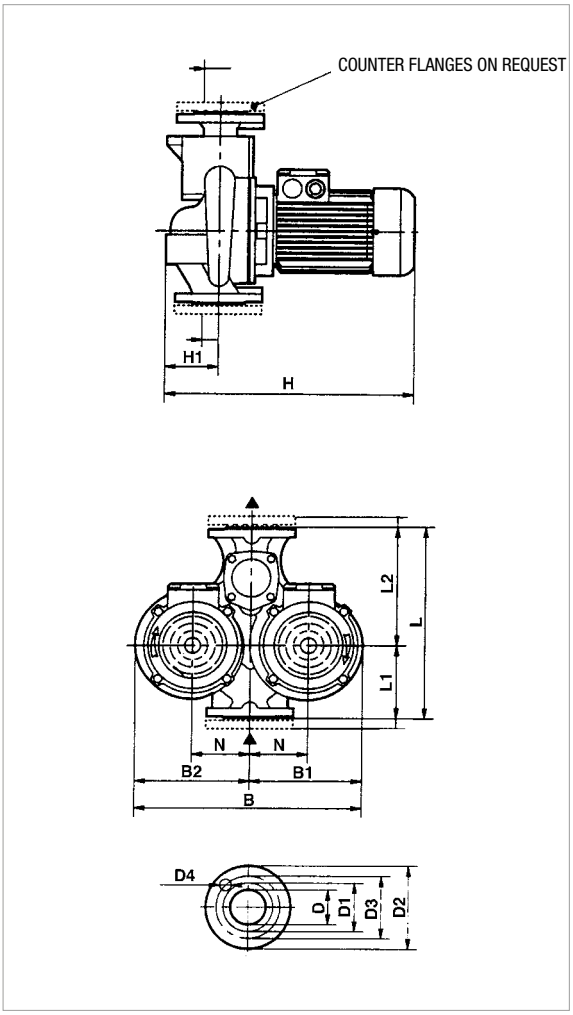

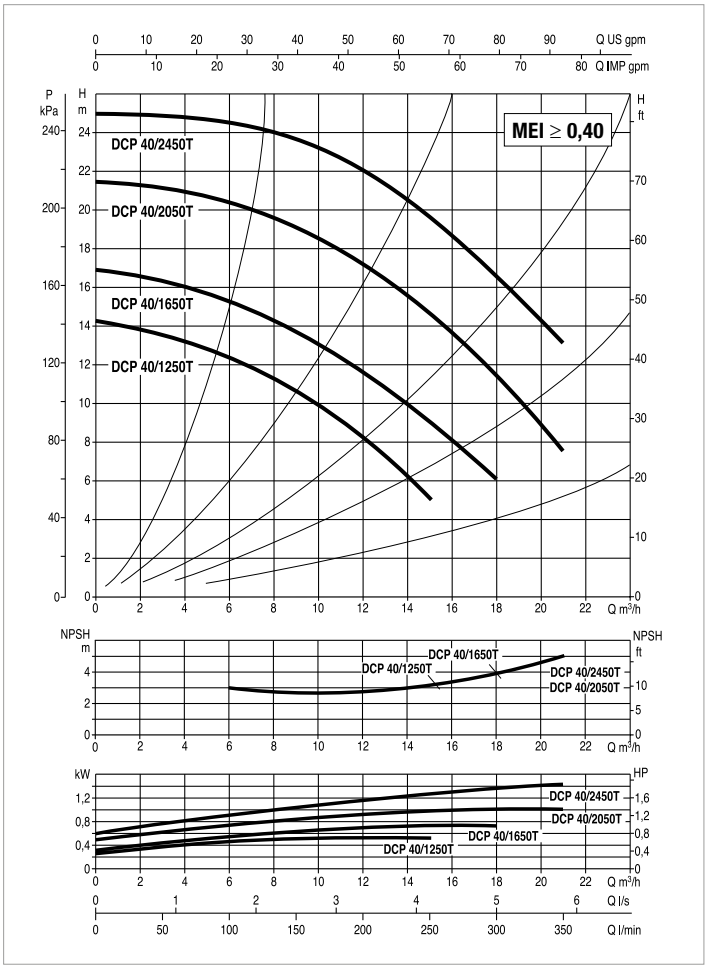

The performance curves are based on kinematic viscosity values = 1 mm^2/s and density equal to 1000 kg/m^3. Curve tolerance according to ISO 9906.

MODEL	CENTRE DISTANCE	PUMP CONNECTIONS	ELECTRICAL DATA							
			POWER INPUT 50 Hz	n r.p.m.	P1 MAX KW	P2 NOMINAL		In A		MOTOR TYPE
						kW	HP	230 V	400 V	
DCP 40/1250 T	340	DN 40	3 x 230 - 400 V ~	2900	0,83	0,75	1	2,9	1,7	IE3
DCP 40/1650 T	340	DN 40	3 x 230 - 400 V ~	2900	1,05	0,75	1	2,9	1,7	IE3
DCP 40/2050 T	340	DN 40	3 x 230 - 400 V ~	2900	1,33	1,1	1,5	4,3	2,5	IE3
DCP 40/2450 T	340	DN 40	3 x 230 - 400 V ~	2900	2,07	1,5	2	5,9	3,4	IE3

MODEL	B	B1	B2	D	D1	D2	D3	D4	no. of holes	H	H1	L	L1	L2	N	PACKING DIMENSIONS			VOL. (m^3)	WEIGHT Kg
																L/A	L/B	H		
DCP 40/1250 T	397	200	197	40 PN6	88	150	110	18	4	425	100	340	130	210	100	520	320	535	0,089	50
DCP 40/1650 T	397	200	197	40 PN6	88	150	110	18		425	100	340	130	210	100	520	320	535	0,089	50
DCP 40/2050 T	397	200	197	40 PN6	88	150	110	18		445	100	340	130	210	100	520	320	535	0,089	52
DCP 40/2450 T	397	200	197	40 PN6	88	150	110	18		445	100	340	130	210	100	520	320	535	0,089	54

DAB PUMPS reserves the right to make modifications without notice.

DCP 50 2 POLES - IN-LINE PUMPS

Pumped liquid temperature range: from -10 °C to +130 °C - Maximum ambient temperature: +40 °C

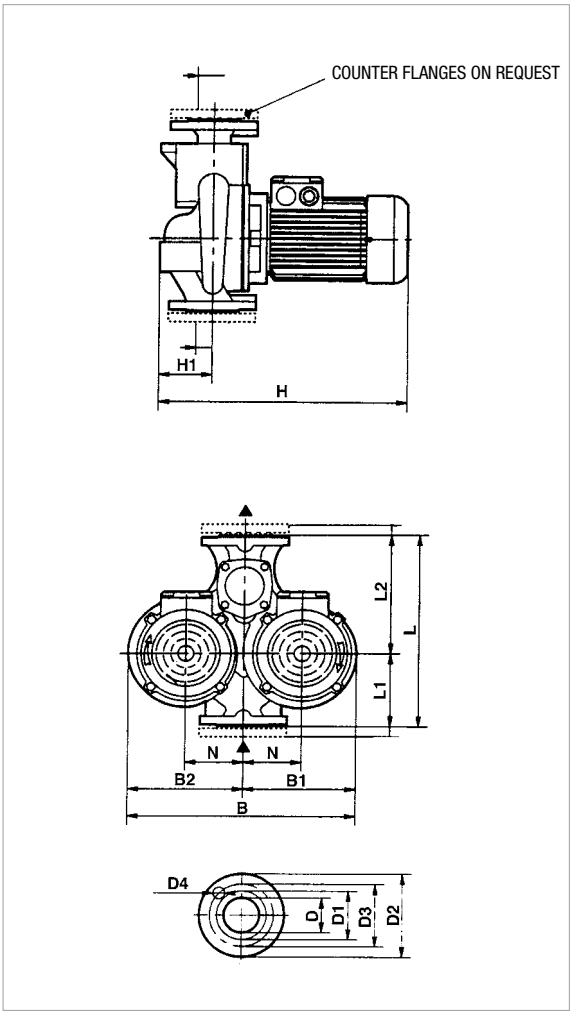

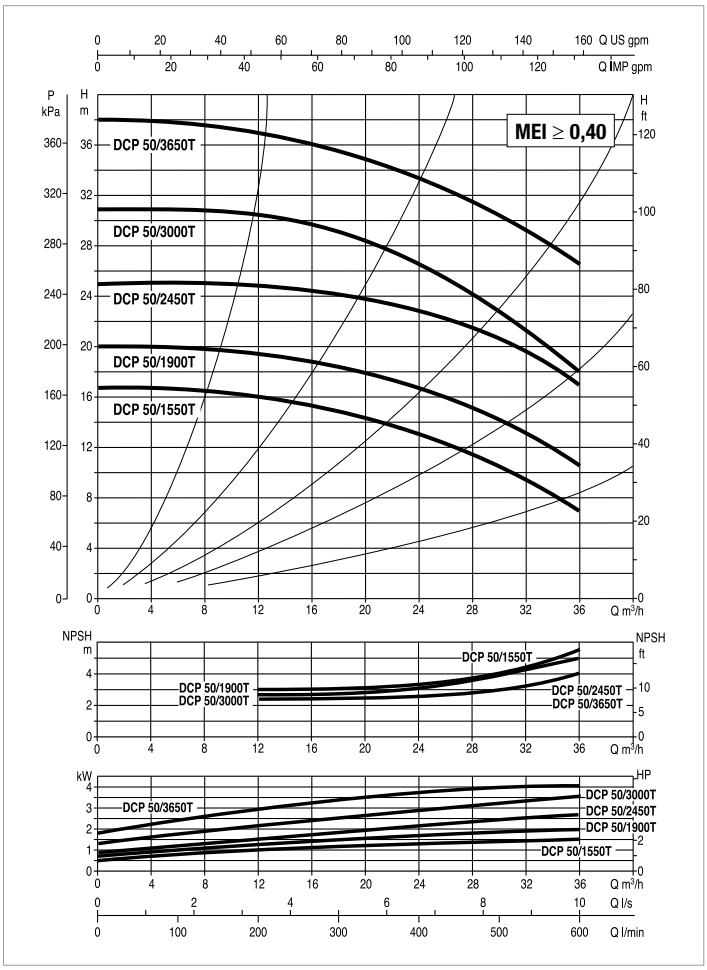

The performance curves are based on kinematic viscosity values = 1 mm^2/s and density equal to 1000 kg/m^3. Curve tolerance according to ISO 9906.

MODEL	CENTRE DISTANCE	PUMP CONNECTIONS	ELECTRICAL DATA								
			POWER INPUT 50 Hz	n r.p.m.	P1 MAX KW	P2 NOMINAL		In A		MOTOR TYPE	MOTOR SIZE
						kW	HP	230 V	400 V		
DCP 50/1550 T	365	DN 50	3 x 230 - 400 V ~	2900	2,07	1,5	2	5,9	3,4	IE3	MEC90S
DCP 50/1900 T	365	DN 50	3 x 230 - 400 V ~	2900	2,53	2	2,7	8	4,6	IE3	MEC90L
DCP 50/2450 T	365	DN 50	3 x 230 - 400 V ~	2900	3,54	3	4	10,2	5,9	IE3	MEC100L
DCP 50/3000 T	365	DN 50	3 x 230 - 400 V ~	2900	3,54	3	4	10,2	5,9	IE3	MEC100L
DCP 50/3650 T	410	DN 50	3 x 230 - 400 V ~	2900	4,87	4	5,5	13,5	7,8	IE3	MEC112M

MODEL	B	B1	B2	D	D1	D2	D3	D4	no. of holes	H	H1	L	L1	L2	N	PACKING DIMENSIONS			VOL. (m^3)	WEIGHT Kg
																L/A	L/B	H		
DCP 50/1550 T	427	217	210	50 PN10	102	165	125	18		455	110	365	145	220	105	520	320	535	0,089	56
DCP 50/1900 T	427	217	210	50 PN10	102	165	125	18		455	110	365	145	220	105	520	320	535	0,089	58
DCP 50/2450 T	427	217	210	50 PN10	102	165	125	18	4	455	110	365	145	220	105	520	320	535	0,089	66
DCP 50/3000 T	480	217	210	50 PN10	102	165	125	18		495	110	365	145	220	105	580	360	585	0,122	56
DCP 50/3650 T	480	245	235	50 PN10	102	165	125	18		535	110	410	170	240	120	580	360	585	0,122	86

DAB PUMPS reserves the right to make modifications without notice.

DCP-G 65 2 POLES - IN-LINE PUMPS

Pumped liquid temperature range: from -10 °C to +140 °C - Maximum ambient temperature: +40 °C

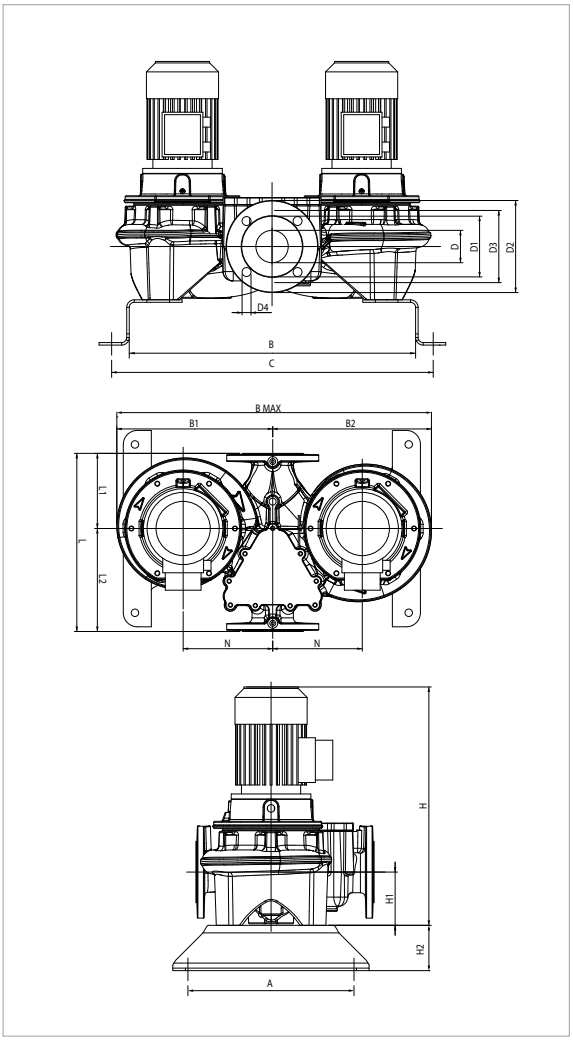

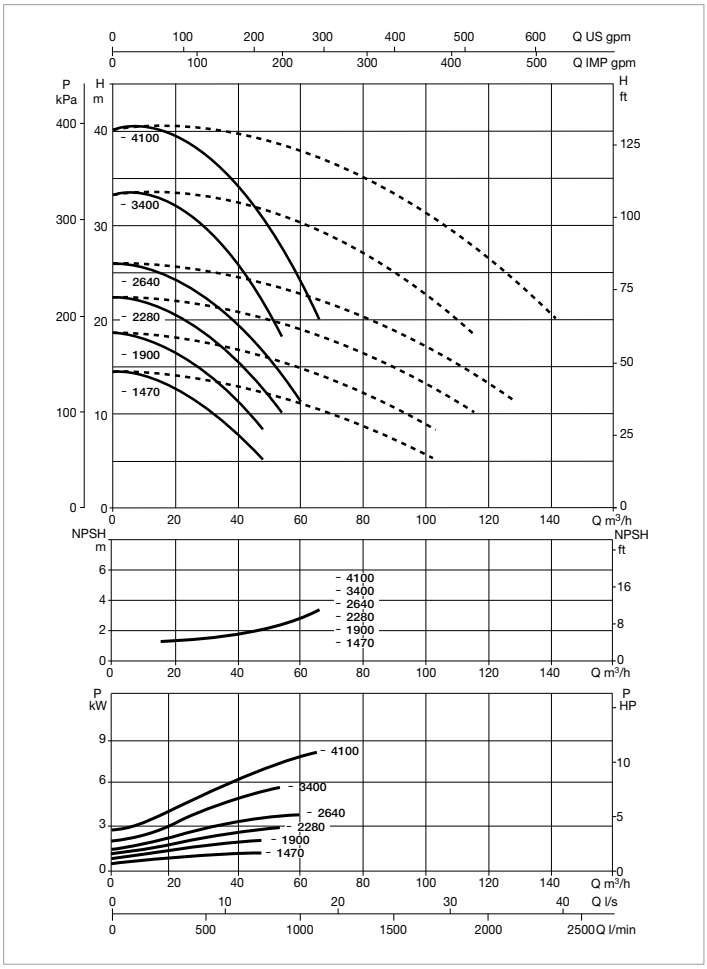

The performance curves are based on kinematic viscosity values = 1 mm^2/s and density equal to 1000 kg/m^3. Curve tolerance according to ISO 9906.

For the MEI index refer to the hydraulic data of the individual pump.

MODEL	CENTRE DISTANCE	PUMP CONNECTIONS	ELECTRICAL DATA									
			POWER INPUT 50 Hz	n r.p.m.	P1 MAX KW	P2 NOMINAL		In A		MOTOR TYPE	MOTOR SIZE	I st. A
						kW	HP	230 V	400 V			
DCP-G 65-1470/A/ BAQE/1,5	360	DN 65	3x230-400 V ~	2883	1,9	1,5	2	5,2	3	IE3	MEC90S	43,7/25,2
DCP-G 65-1900/A/ BAQE/2,2	360	DN 65	3x230-400 V ~	2872	3,1	2,2	3	7,97	4,6	IE3	MEC90L	73,3/42,3
DCP-G 65-2280/A/ BAQE/3	360	DN 65	3 x 400 V ~ [1]	2882	3,4	3	4	-	5,6	IE3	MEC100L	49,3
DCP-G 65-2640/A/ BAQE/4	360	DN 65	3 x 400 V ~ [1]	2910	4,7	4	5,5	-	8,2	IE3	MEC112M	89,4
DCP-G 65-3400/A/ BAQE/5,5	360	DN 65	3 x 400 V ~ [1]	2913	6,6	5,5	7,5	-	10,2	IE3	MEC132S	114,2
DCP-G 65-4100/A/ BAQE/7,5	360	DN 65	3 x 400 V ~ [1]	2900	8,7	7,5	10	-	14,4	IE3	MEC132S	113,9

[1] star start-up possible (λ)

MODEL	A	B	B1	B2	B max	C	D	D1	D2	D3	D4	no. of holes	H	H1	H2	L	L1	L2	M	N	PACKING DIMENSIONS			VOL. (m^3)	WEIGHT Kg
																					L/A	L/B	H		
DCP-G 65-1470/A/ BAQE/1,5	330	569	315	320	635	639	65	122	185	145	18	4	557	107	100	358	151	207	M16	180	358	635	549	0,12	127
DCP-G 65-1900/A/ BAQE/2,2	330	569	315	320	635	639	65	122	185	145	18		583	107	100	358	151	207	M16	180	358	635	574	0,13	140
DCP-G 65-2280/A/ BAQE/3	330	569	315	320	635	639	65	122	185	145	18		653	107	100	358	151	207	M16	180	358	635	632	0,14	167
DCP-G 65-2640/A/ BAQE/4	330	569	315	320	635	639	65	122	185	145	18		635	107	100	358	151	207	M16	180	358	635	647	0,15	151
DCP-G 65-3400/A/ BAQE/5,5	330	569	324	329	635	639	65	122	185	145	18		716	107	100	358	151	207	M16	180	358	635	736	0,17	202
DCP-G 65-4100/A/ BAQE/7,5	330	569	324	329	653	639	65	122	185	145	18		783	107	100	358	151	207	M17	180	358	653	736	0,17	248

DCP-G 65 2 POLES - IN-LINE PUMPS

Pumped liquid temperature range: from -10 °C to +140 °C - Maximum ambient temperature: +40 °C

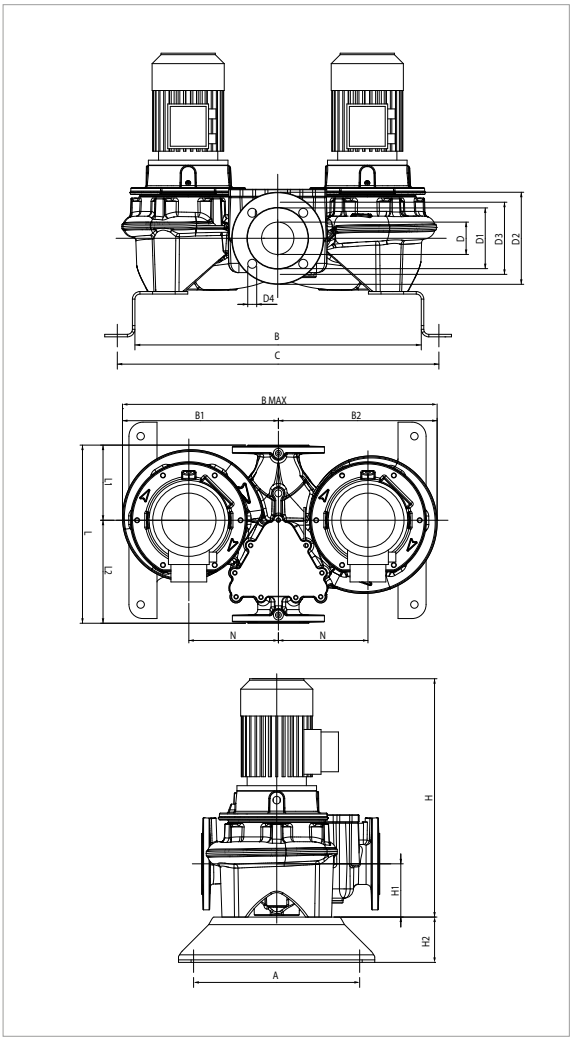

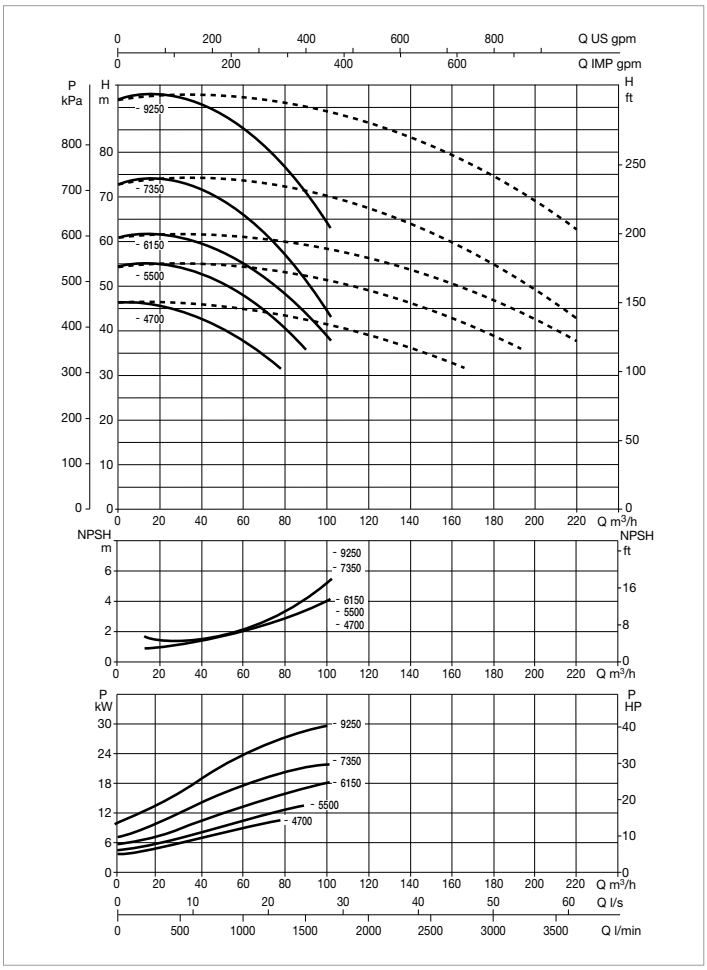

The performance curves are based on kinematic viscosity values = 1 mm^2/s and density equal to 1000 kg/m^3. Curve tolerance according to ISO 9906.

For the MEI index refer to the hydraulic data of the individual pump.

MODEL	CENTRE DISTANCE	PUMP CONNECTIONS	ELECTRICAL DATA								
			POWER INPUT 50 Hz	n r.p.m.	P1 MAX KW	P2 NOMINAL		In A	MOTOR TYPE	MOTOR SIZE	I st. A
						kW	HP	400 V			
DCP-G 65-4700/A/ BAQE/11	475	DN 65	3 x 400 V ~ [1]	2940	12	11	15	19,9	IE3	MEC160M	147,4
DCP-G 65-5500/A/ BAQE/15	475	DN 65	3 x 400 V ~ [1]	2943	17	15	20	26,8	IE3	MEC160M	204
DCP-G 65-6150/A/ BAQE/18,5	475	DN 65	3 x 400 V ~ [1]	2947	21	18,5	25	33	IE3	MEC160L	262,4
DCP-G 65-7350/A/ BAQE/22	475	DN 65	3 x 400 V ~ [1]	2961	24,5	22	30	38,1	IE3	MEC180M	330,6
DCP-G 65-9250/A/ BAQE/30	475	DN 65	3 x 400 V ~ [1]	2950	33	30	40	52,1	IE3	MEC200L	468

[1] star start-up possible (λ)

MODEL	A	B	B1	B2	B max	C	D	D1	D2	D3	D4	no. of holes	H	H1	H2	L	L1	L2	M	N	PACKING DIMENSIONS			VOL. (m^3)	WEIGHT Kg
																					L/A	L/B	H		
DCP-G 65-4700/A/BAQE/11	330	649	389	397	786	719	65	122	185	145	18		895	125	100	475	177	298	M16	220	475	786	895	0,33	388
DCP-G 65-5500/A/BAQE/15	330	649	389	397	786	719	65	122	185	145	18		895	125	100	475	177	298	M16	220	475	786	895	0,33	420
DCP-G 65-6150/A/BAQE/18,5	330	649	389	397	786	719	65	122	185	145	18	4	939	125	100	475	177	298	M16	220	475	786	950	0,35	450
DCP-G 65-7350/A/BAQE/22	330	649	389	397	786	719	65	122	185	145	18		970	125	100	475	177	298	M16	220	475	786	970	0,36	521
DCP-G 65-9250/A/BAQE/30	330	649	414	422	836	719	65	122	185	145	18		1000	125	100	475	177	298	M16	220	475	836	990	0,39	745

DAB PUMPS reserves the right to make modifications without notice.

DCP-G 80 2 POLES - IN-LINE PUMPS

Pumped liquid temperature range: from -10 °C to +140 °C - Maximum ambient temperature: +40 °C

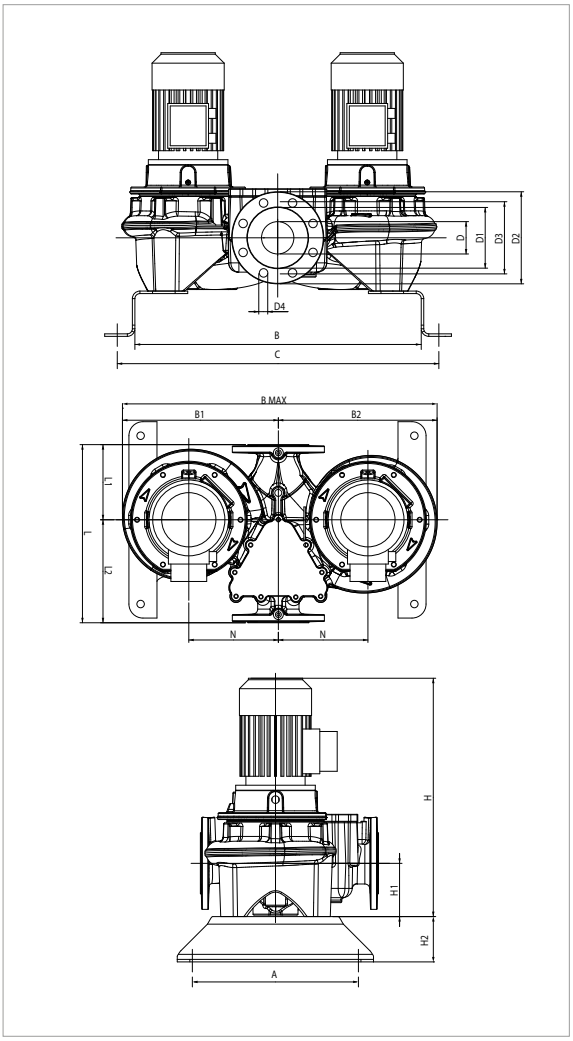

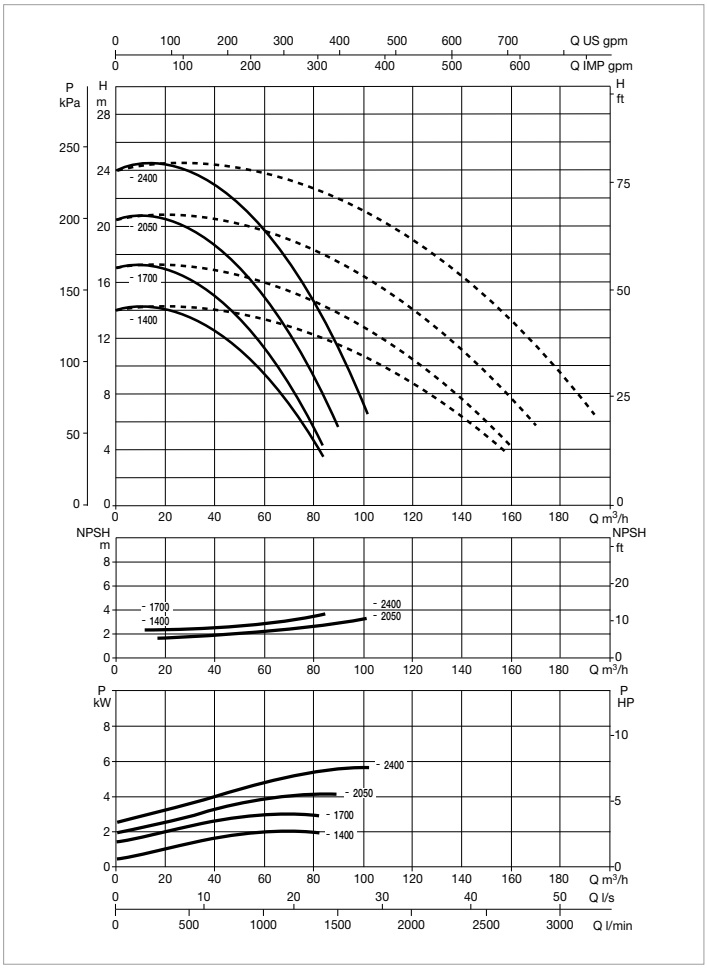

The performance curves are based on kinematic viscosity values = 1 mm^2/s and density equal to 1000 kg/m^3. Curve tolerance according to ISO 9906.

For the MEI index refer to the hydraulic data of the individual pump.

MODEL	CENTRE DISTANCE	PUMP CONNECTIONS	ELECTRICAL DATA									
			POWER INPUT 50 Hz	n r.p.m.	P1 MAX KW	P2 NOMINAL		In A		MOTOR TYPE	MOTOR SIZE	I st. A
						kW	HP	230 V	400 V			
DCP-G 80-1400/A/BAQE/2,2	360	DN 80	3x230-400 V ~	2874	3	2,2	3	7,97	4,6	IE3	MEC90L	73,3/42,3
DCP-G 80-1700/A/BAQE/3	360	DN 80	3 x 400 V ~ [1]	2880	3,5	3	4	-	5,6	IE3	MEC100L	49,3
DCP-G 80-2050/A/BAQE/4	360	DN 80	3 x 400 V ~ [1]	2914	5	4	5,5	-	8,2	IE3	MEC112M	89,4
DCP-G 80-2400/A/BAQE/5,5	360	DN 80	3 x 400 V ~ [1]	2910	6,4	5,5	7,5	-	10,2	IE3	MEC132S	114,2

[1] star start-up possible (λ)

MODEL	A	B	B1	B2	B max	C	D	D1	D2	D3	D4	no. of holes	H	H1	H2	L	L1	L2	M	N	PACKING DIMENSIONS			VOL. (m^3)	WEIGHT Kg
																					L/A	L/B	H		
DCP-G 80-1400/A/ BAQE/2,2	330	580	305	310	615	650	80	137	200	160	18	4	585	115	100	360	165	195	M16	180	360	615	586	0,13	152
DCP-G 80-1700/A/ BAQE/3	330	580	305	310	615	650	80	137	200	160	18		655	115	100	360	165	195	M16	180	360	615	644	0,14	160
DCP-G 80-2050/A/ BAQE/4	330	580	305	310	615	650	80	137	200	160	18		637	115	100	360	165	195	M16	180	360	615	659	0,15	140
DCP-G 80-2400/A/ BAQE/5,5	330	580	327	332	659	650	80	137	200	160	18		718	115	100	360	165	195	M16	180	360	659	748	0,18	194

DCP-G 80 2 POLES - IN-LINE PUMPS

Pumped liquid temperature range: from -10 °C to +140 °C - Maximum ambient temperature: +40 °C

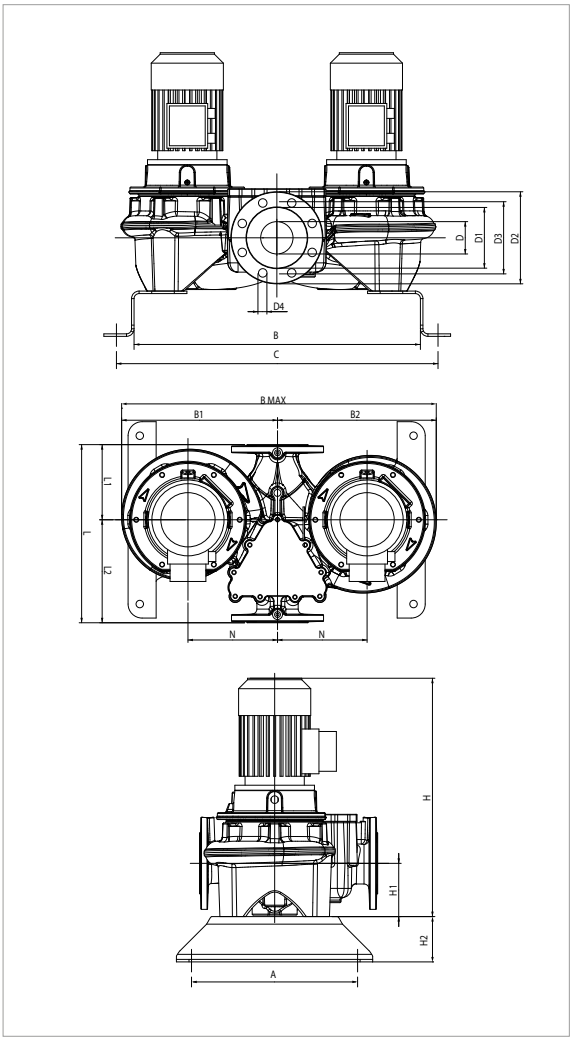

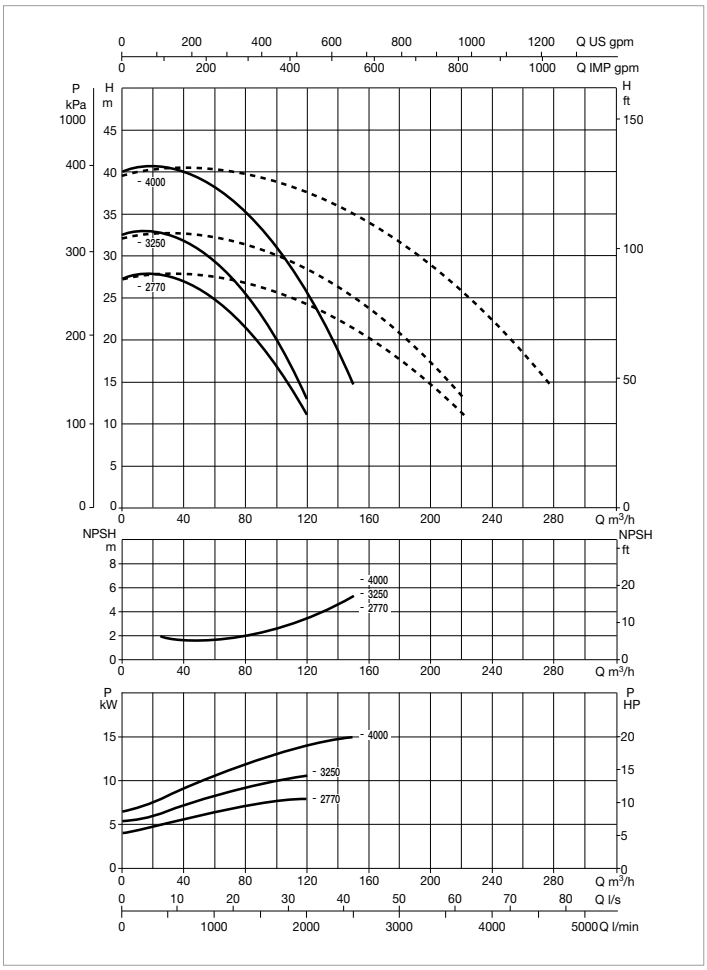

The performance curves are based on kinematic viscosity values = 1 mm^2/s and density equal to 1000 kg/m^3. Curve tolerance according to ISO 9906.

For the MEI index refer to the hydraulic data of the individual pump.

MODEL	CENTRE DISTANCE	PUMP CONNECTIONS	ELECTRICAL DATA								
			POWER INPUT 50 Hz	n r.p.m.	P1 MAX KW	P2 NOMINAL		In A	MOTOR TYPE	MOTOR SIZE	I st. A
						kW	HP	400 V			
DCP-G 80-2770/A/ BAQE/7,5	440	DN 80	3 x 400 V ~ [1]	2905	8,7	7,5	10	14,4	IE3	MEC132S	113,9
DCP-G 80-3250/A/ BAQE/11	440	DN 80	3 x 400 V ~ [1]	2932	12	11	15	19,9	IE3	MEC160M	147,4
DCP-G 80-4000/A/ BAQE/15	440	DN 80	3 x 400 V ~ [1]	2945	17	15	20	26,8	IE3	MEC160M	204

[1] star start-up possible (λ)

MODEL	A	B	B1	B2	B max	C	D	D1	D2	D3	D4	no. of holes	H	H1	H2	L	L1	L2	M	N	PACKING DIMENSIONS			VOL. (m^3)	WEIGHT Kg
																					L/A	L/B	H		
DCP-G 80-2770/A/BAQE/7,5	330	620	355	365	720	690	80	137	200	160	18	8	795	115	100	440	165	195	M16	180	440	720	748	0,24	150
DCP-G 80-3250/A/BAQE/11	330	620	344	374	738	690	80	137	200	160	18		893	115	100	440	165	195	M16	180	440	738	893	0,29	169
DCP-G 80-4000/A/BAQE/15	330	620	344	374	738	690	80	137	200	160	18		893	115	100	440	165	195	M16	180	440	738	893	0,29	175

DCP-G 80 2 POLES - IN-LINE PUMPS

Pumped liquid temperature range: from -10 °C to +140°C - Maximum ambient temperature: +40 °C

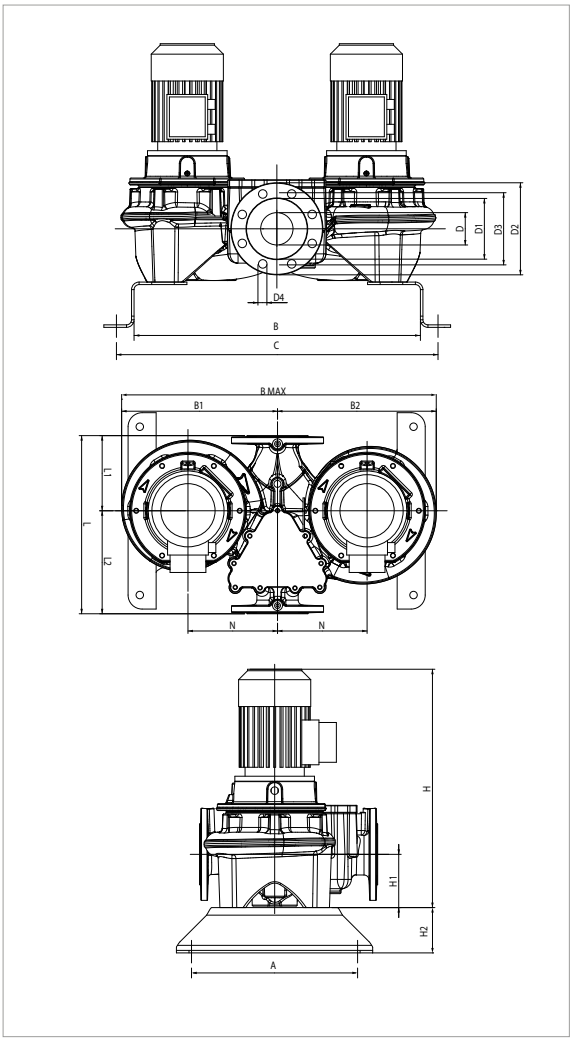

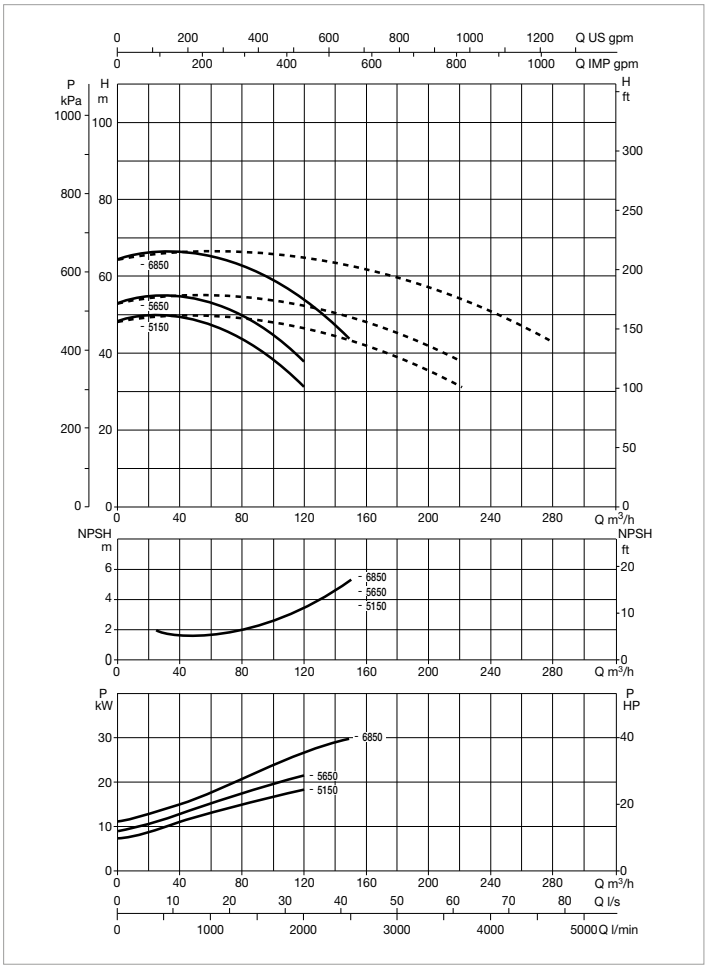

The performance curves are based on kinematic viscosity values = 1 mm^2/s and density equal to 1000 kg/m^3. Curve tolerance according to ISO 9906.

For the MEI index refer to the hydraulic data of the individual pump.

MODEL	CENTRE DISTANCE	PUMP CONNECTIONS	ELECTRICAL DATA								
			POWER INPUT 50 Hz	n r.p.m.	P1 MAX KW	P2 NOMINAL		In A	MOTOR TYPE	MOTOR SIZE	I st. A
						kW	HP	400 V			
DCP-G 80-5150/A/BAQE/18,5	500	DN 80	3 x 400 V ~ [1]	2943	21	18,5	25	33	IE3	MEC160L	262,4
DCP-G 80-5650/A/BAQE/22	500	DN 80	3 x 400 V ~ [1]	2967	24	22	30	38,1	IE3	MEC180M	330,6
DCP-G 80-6850/A/BAQE/30	500	DN 80	3 x 400 V ~ [1]	2951	33	30	40	52,1	IE3	MEC200L	468

[1] star start-up possible (λ)

MODEL	A	B	B1	B2	B max	C	D	D1	D2	D3	D4	no. of holes	H	H1	H2	L	L1	L2	M	N	PACKING DIMENSIONS			VOL. (m^3)	WEIGHT Kg
																					L/A	L/B	H		
DCP-G 80-5150/A/BAQE/18,5	362	662	405	415	820	732	80	137	200	160	18	8	943	115	100	500	180	260	M16	200	500	820	954	0,39	223
DCP-G 80-5650/A/BAQE/22	362	662	405	415	820	732	80	137	200	160	18		974	115	100	500	180	260	M16	200	500	820	974	0,4	353
DCP-G 80-6850/A/BAQE/30	362	662	426	394	862	732	80	137	200	160	18		1064	115	100	500	180	260	M16	200	500	862	1054	0,45	485

DAB PUMPS reserves the right to make modifications without notice.

DCP-G 80 2 POLES - IN-LINE PUMPS

Pumped liquid temperature range: from -10 °C to +140 °C - Maximum ambient temperature: +40 °C

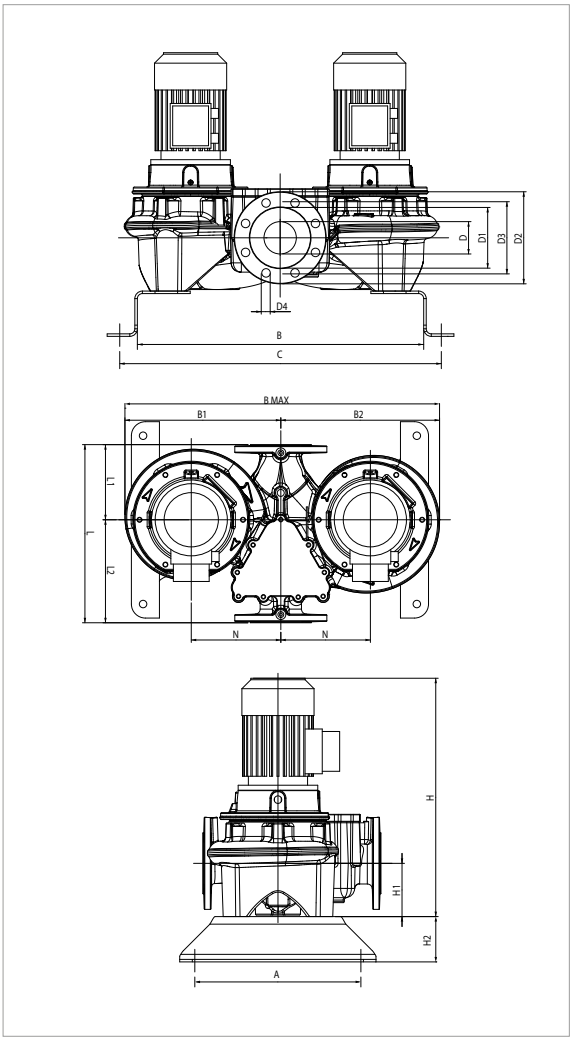

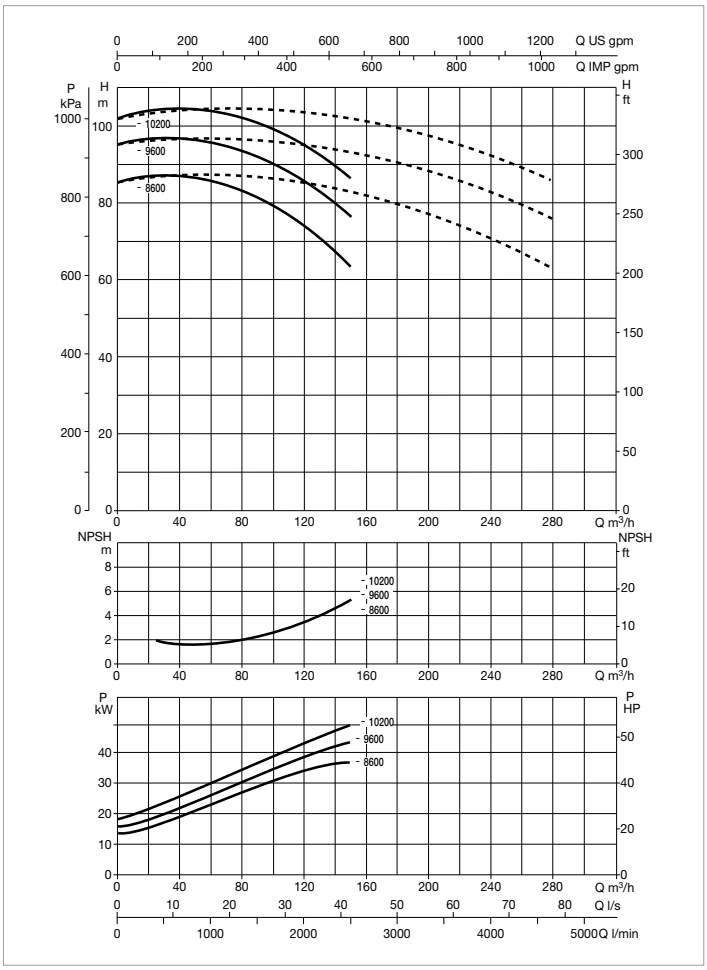

The performance curves are based on kinematic viscosity values = 1 mm^2/s and density equal to 1000 kg/m^3. Curve tolerance according to ISO 9906.

For the MEI index refer to the hydraulic data of the individual pump.

MODEL	CENTRE DISTANCE	PUMP CONNECTIONS	ELECTRICAL DATA								
			POWER INPUT 50 Hz	n r.p.m.	P1 MAX KW	P2 NOMINAL		In A	MOTOR TYPE	MOTOR SIZE	I st. A
						kW	HP	400 V			
DCP-G 80-8600/A/BAQE/37	620	DN 80	3 x 400 V ~ [1]	2967	42	37	50	62,6	IE3	MEC200L	567
DCP-G 80-9600/A/BAQE/45	620	DN 80	3 x 400 V ~ [1]	2966	49	45	60	78,4	IE3	MEC225M	630,8
DCP-G 80-10200/A/BAQE/55	620	DN 80	3 x 400 V ~ [1]	2979	59	55	75	94,6	IE3	MEC250M	684

[1] star start-up possible (λ)

MODEL	A	B	B1	B2	B max	C	D	D1	D2	D3	D4	no. of holes	H	H1	H2	L	L1	L2	M	N	PACKING DIMENSIONS			VOL. (m^3)	WEIGHT Kg
																					L/A	L/B	H		
DCP-G 80-8600/A/BAQE/37	500	804	530	540	1070	924	80	137	200	160	18	8	1081	115	100	620	220	280	M16	235	620	1070	1071	0,71	482
DCP-G 80-9600/A/BAQE/45	500	804	530	540	1070	924	80	137	200	160	18		1096	115	100	620	220	280	M16	235	620	1070	1091	0,72	673
DCP-G 80-10200/A/BAQE/55	500	804	567	577	1144	924	80	137	200	160	18		1216	115	100	620	220	280	M16	235	620	1144	1216	0,86	939

DCP-G 100 2 POLES - IN-LINE PUMPS

Pumped liquid temperature range: from -10 °C to +140 °C - Maximum ambient temperature: +40 °C

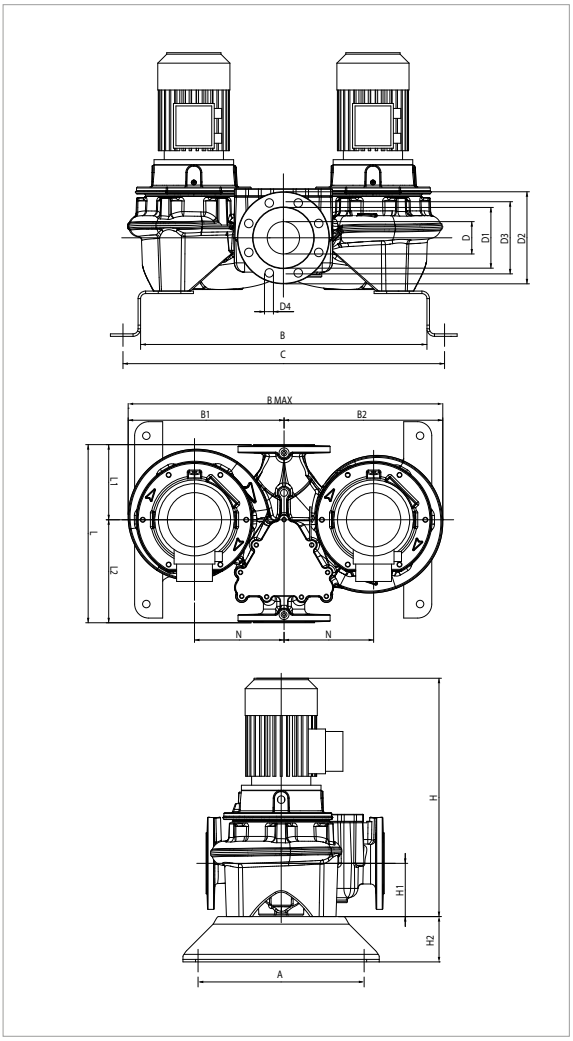

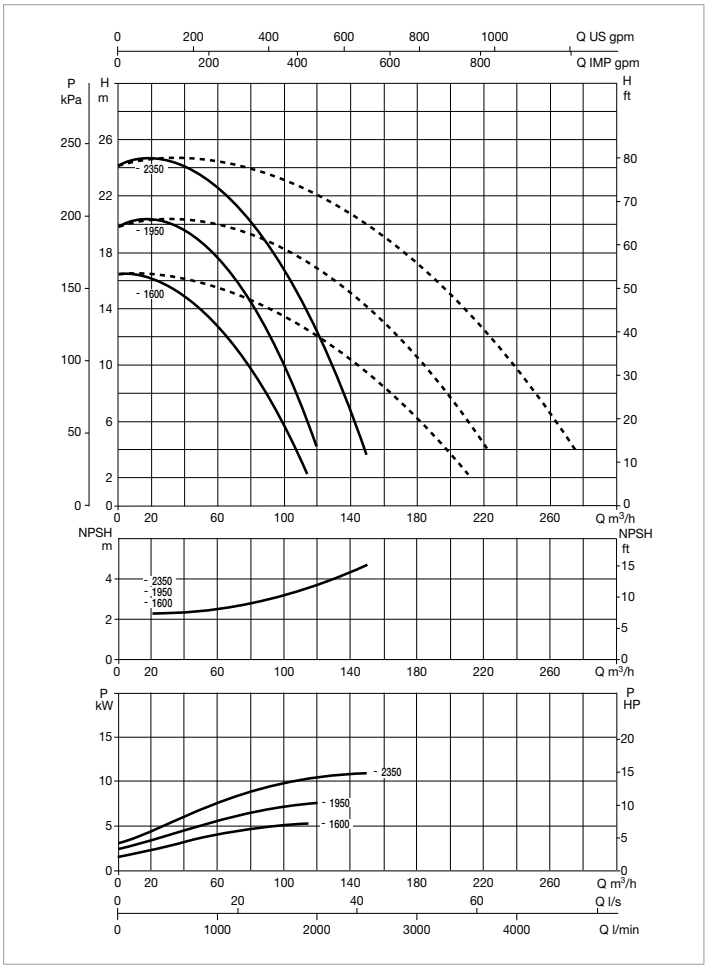

The performance curves are based on kinematic viscosity values = 1 mm^2/s and density equal to 1000 kg/m^3. Curve tolerance according to ISO 9906.

For the MEI index refer to the hydraulic data of the individual pump.

MODEL	CENTRE DISTANCE	PUMP CONNECTIONS	ELECTRICAL DATA								
			POWER INPUT 50 Hz	n r.p.m.	P1 MAX KW	P2 NOMINAL		In A	MOTOR TYPE	MOTOR SIZE	I st. A
						kW	HP	400 V			
DCP-G 100-1600/A/BAQE/4	500	DN 100	3 x 400 V ~ [1]	2918	5,3	4	5,5	8,2	IE3	MEC112M	89,4
DCP-G 100-1950/A/BAQE/5,5	500	DN 100	3 x 400 V ~ [1]	2918	7	5,5	7,5	10,2	IE3	MEC132S	114,2
DCP-G 100-2350/A/BAQE/7,5	500	DN 100	3 x 400 V ~ [1]	2906	8,7	7,5	10	14,4	IE3	MEC132S	113,9

[1] star start-up possible (λ)

MODEL	A	B	B1	B2	B max	C	D	D1	D2	D3	D4	no. of holes	H	H1	H2	L	L1	L2	M	N	PACKING DIMENSIONS			VOL. (m^3)	WEIGHT Kg
																					L/A	L/B	H		
DCP-G 100-1600/A/BAQE/4	362	637	330	345	675	717	80	137	200	160	18	8	674	140	100	500	280	340	M16	300	500	675	687	0,23	128
DCP-G 100-1950/A/BAQE/5,5	362	637	335	350	685	717	80	137	200	160	18		755	140	100	500	280	340	M16	300	500	685	775	0,27	127
DCP-G 100-2350/A/BAQE/7,5	362	637	335	350	685	717	80	137	200	160	18		822	140	100	500	280	340	M16	300	500	685	775	0,27	194

DAB PUMPS reserves the right to make modifications without notice.

DCP-G 100 2 POLES - IN-LINE PUMPS

Pumped liquid temperature range: from -10 °C to +140 °C - Maximum ambient temperature: +40 °C

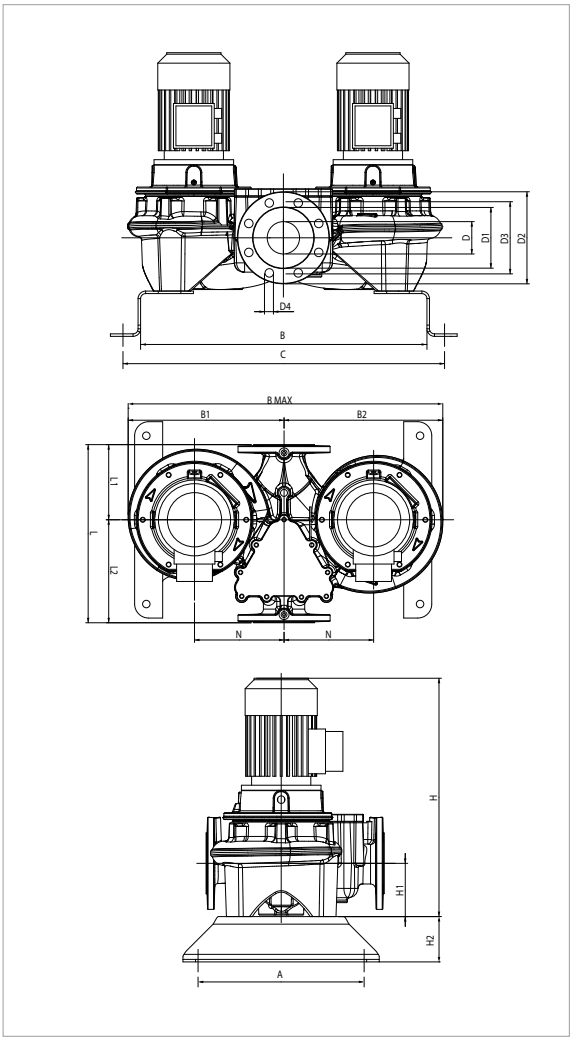

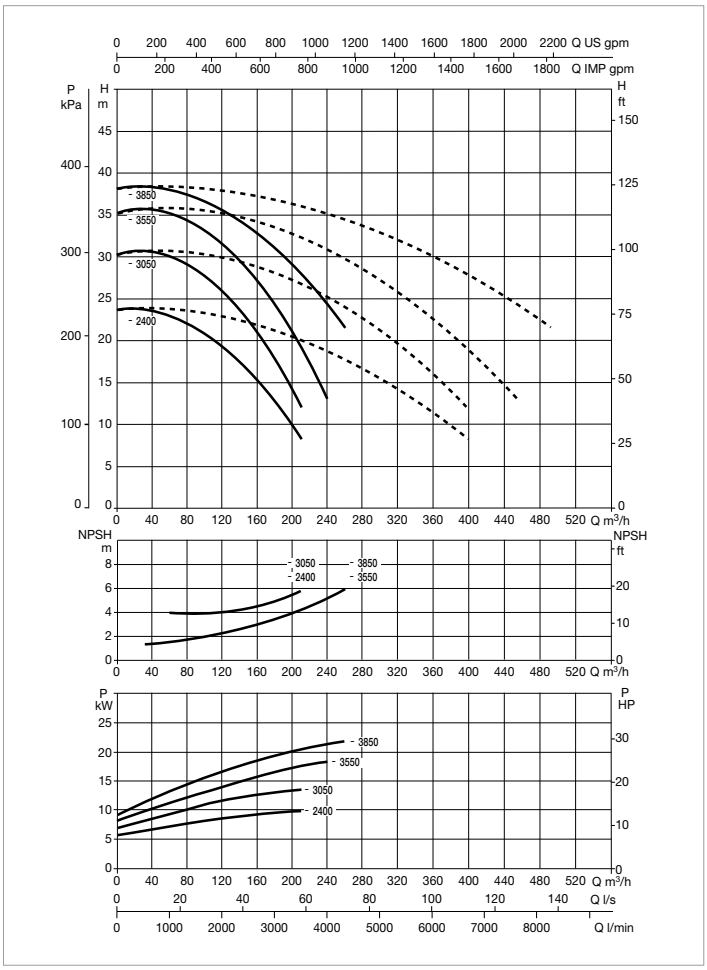

The performance curves are based on kinematic viscosity values = 1 mm^2/s and density equal to 1000 kg/m^3. Curve tolerance according to ISO 9906.

For the MEI index refer to the hydraulic data of the individual pump.

MODEL	CENTRE DISTANCE	PUMP CONNECTIONS	ELECTRICAL DATA								
			POWER INPUT 50 Hz	n r.p.m.	P1 MAX KW	P2 NOMINAL		In A	MOTOR TYPE	MOTOR SIZE	I st. A
						kW	HP	400 V			
DCP-G 100-2400/A/BAQE/11	550	DN 100	3 x 400 V ~ [1]	2940	12	11	15	19,9	IE3	MEC160M	147,4
DCP-G 100-3050/A/BAQE/15	550	DN 100	3 x 400 V ~ [1]	2941	17	15	20	26,8	IE3	MEC160M	204
DCP-G 100-3550/A/AQE/18,5	550	DN 100	3 x 400 V ~ [1]	2948	21	18,5	25	33	IE3	MEC160L	262,4
DCP-G 100-3850/A/BAQE/22	550	DN 100	3 x 400 V ~ [1]	2973	24	22	30	38,1	IE3	MEC180M	330,6

[1] star start-up possible (λ)

MODEL	A	B	B1	B2	B max	C	D	D1	D2	D3	D4	no. of holes	H	H1	H2	L	L1	L2	M	N	PACKING DIMENSIONS			VOL. (m^3)	WEIGHT Kg
																					L/A	L/B	H		
DCP-G 100-2400/A/BAQE/11	362	733	395	410	805	813	100	156	220	180	18	8	915	140	100	550	191	309	M16	200	550	805	915	0,41	238
DCP-G 100-3050/A/BAQE/15	362	733	395	410	805	813	100	156	220	180	18		915	140	100	550	191	309	M16	200	550	805	915	0,41	313
DCP-G 100-3550/A/AQE/18,5	362	733	395	410	805	813	100	156	220	180	18		959	140	100	550	191	309	M16	200	550	805	970	0,43	329
DCP-G 100-3850/A/BAQE/22	362	733	395	410	805	813	100	156	220	180	18		990	140	100	550	191	309	M16	200	550	805	990	0,44	402

DAB PUMPS reserves the right to make modifications without notice.

DCP-G 100 2 POLES - IN-LINE PUMPS

Pumped liquid temperature range: from -10 °C to +140 °C - Maximum ambient temperature: +40 °C

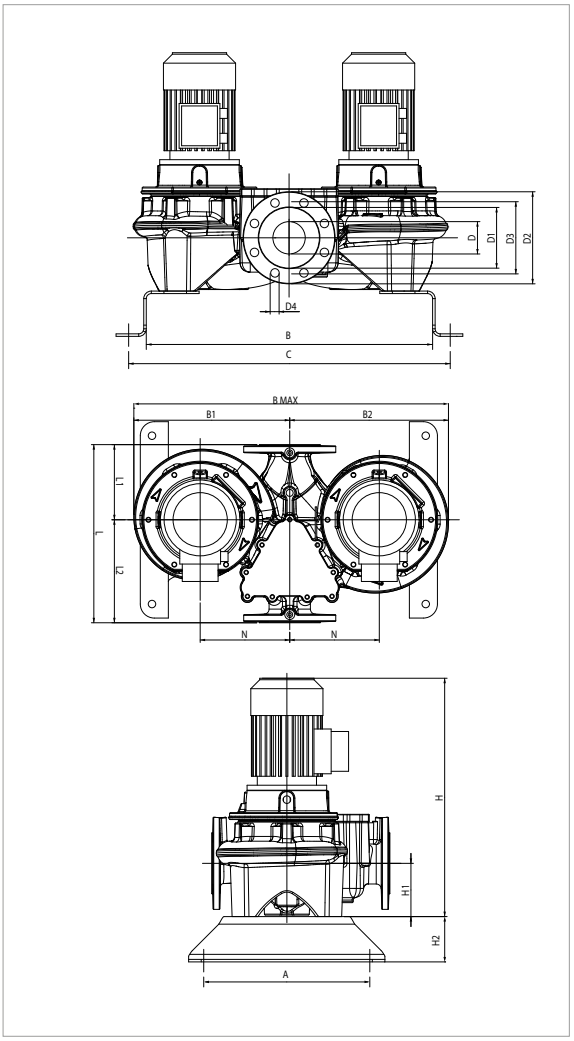

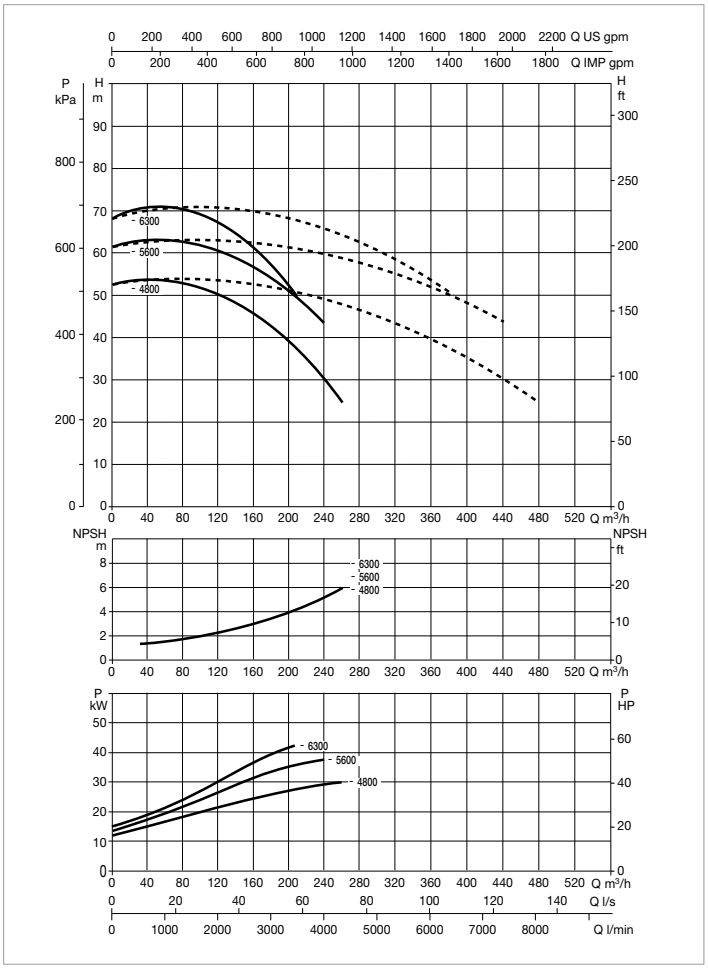

The performance curves are based on kinematic viscosity values = 1 mm^2/s and density equal to 1000 kg/m^3. Curve tolerance according to ISO 9906.

For the MEI index refer to the hydraulic data of the individual pump.

MODEL	CENTRE DISTANCE	PUMP CONNECTIONS	ELECTRICAL DATA								
			POWER INPUT 50 Hz	n r.p.m.	P1 MAX KW	P2 NOMINAL		In A	MOTOR TYPE	MOTOR SIZE	I st. A
						kW	HP	400 V			
DCP-G 100-4800/A/BAQE/30	550	DN 100	3 x 400 V ~ [1]	2966	33	30	40	52,1	IE3	MEC200L	468
DCP-G 100-5600/A/BAQE/37	550	DN 100	3 x 400 V ~ [1]	2975	42	37	50	62,6	IE3	MEC200L	567
DCP-G 100-6300/A/BAQE/45	550	DN 100	3 x 400 V ~ [1]	2975	49	45	60	78,4	IE3	MEC225M	630,8

[1] star start-up possible (λ)

MODEL	A	B	B1	B2	B max	C	D	D1	D2	D3	D4	no. of holes	H	H1	H2	L	L1	L2	M	N	PACKING DIMENSIONS			VOL. (m^3)	WEIGHT Kg
																					L/A	L/B	H		
DCP-G 100-4800/A/BAQE/30	362	753	440	450	890	833	100	156	220	180	18	8	1118	140	100	550	221	329	M16	235	550	890	1108	0,54	496
DCP-G 100-5600/A/BAQE/37	362	753	440	450	890	833	100	156	220	180	18		1118	140	100	550	221	329	M16	235	550	890	1108	0,54	697
DCP-G 100-6300/A/BAQE/45	362	753	465	475	940	833	100	156	220	180	18		1103	140	100	550	221	329	M16	235	550	940	1098	0,57	1062

DCP-G 100 2 POLES - IN-LINE PUMPS

Pumped liquid temperature range: from -10 °C to +140 °C - Maximum ambient temperature: +40 °C

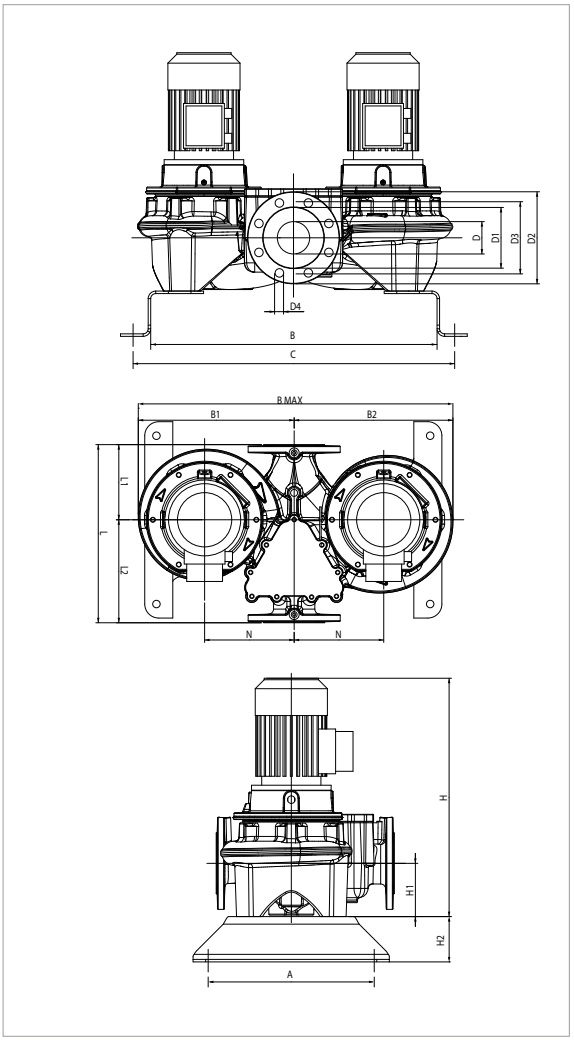

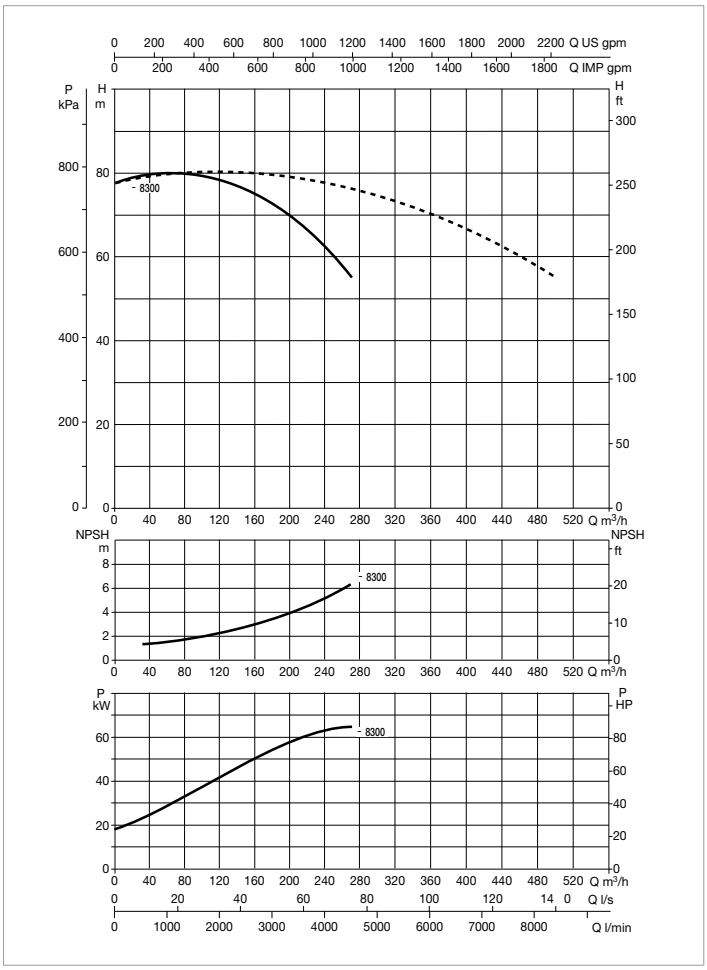

The performance curves are based on kinematic viscosity values = 1 mm^2/s and density equal to 1000 kg/m^3. Curve tolerance according to ISO 9906.

For the MEI index refer to the hydraulic data of the individual pump.

MODEL	CENTRE DISTANCE	PUMP CONNECTIONS	ELECTRICAL DATA								
			POWER INPUT 50 Hz	n r.p.m.	P1 MAX KW	P2 NOMINAL		In A	MOTOR TYPE	MOTOR SIZE	I st. A
						kW	HP	400 V			
DCP-G 100-8300/A/BAQE/55	670	DN 100	3 x 400 V ~ [1]	2981	59	55	75	94,6	IE3	MEC250M	684

[1] star start-up possible (λ)

MODEL	A	B	B1	B2	B max	C	D	D1	D2	D3	D4	no. of holes	H	H1	H2	L	L1	L2	M	N	PACKING DIMENSIONS			VOL. (m^3)	WEIGHT Kg
																					L/A	L/B	H		
DCP-G 100-8300/A/BAQE/55	500	836	563	578	1141	956	100	156	220	180	18	8	1256	140	100	670	221	329	M16	250	670	1141	1256	0,96	1388

DAB PUMPS reserves the right to make modifications without notice.

DCP-G 125 2 POLES - IN-LINE PUMPS

Pumped liquid temperature range: from -10 °C to +140 °C - Maximum ambient temperature: +40 °C

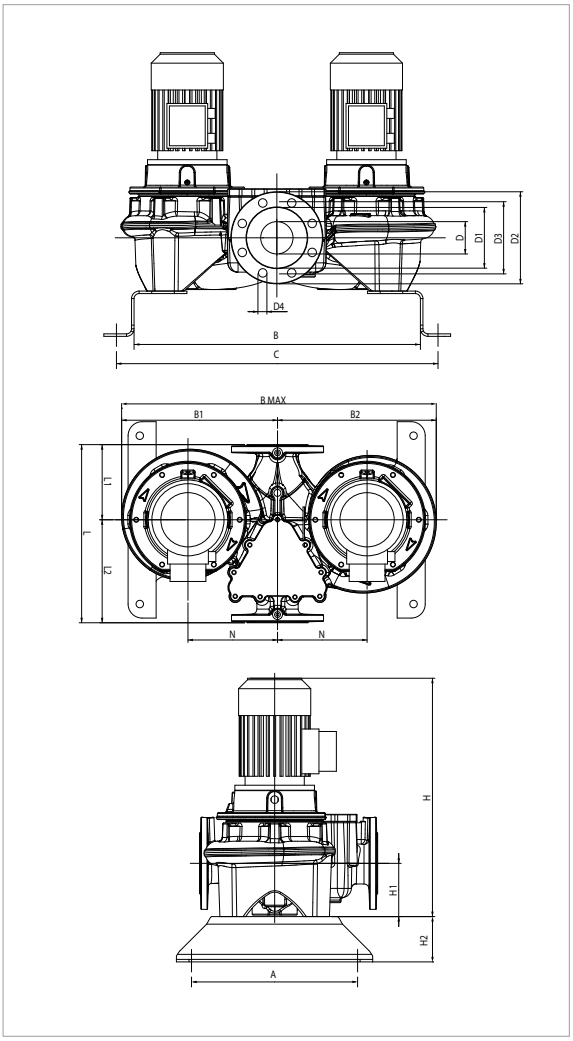

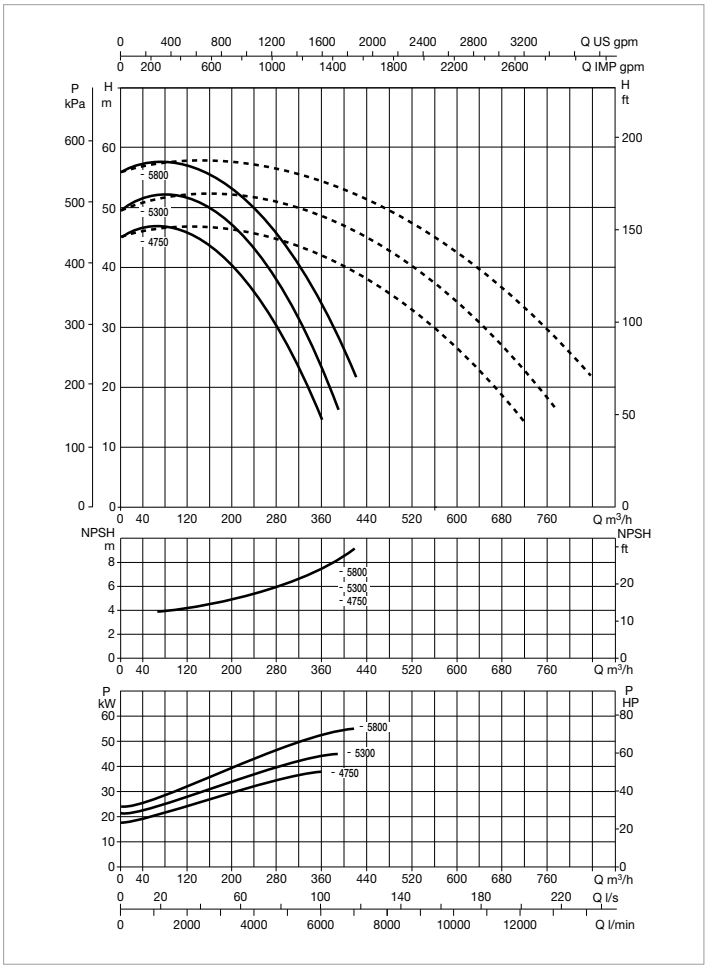

The performance curves are based on kinematic viscosity values = 1 mm^2/s and density equal to 1000 kg/m^3. Curve tolerance according to ISO 9906.

For the MEI index refer to the hydraulic data of the individual pump.

MODEL	CENTRE DISTANCE	PUMP CONNECTIONS	ELECTRICAL DATA								
			POWER INPUT 50 Hz	n r.p.m.	P1 MAX KW	P2 NOMINAL		In A	MOTOR TYPE	MOTOR SIZE	I st. A
						kW	HP	400 V			
DCP-G 125-4750/A/BAQE/37	620	DN 125	3 x 400 V ~ [1]	2975	44,7	37	50	62,6	IE3	MEC200L	567
DCP-G 125-5300/A/BAQE/45	620	DN 125	3 x 400 V ~ [1]	2973	53,9	45	60	78,4	IE3	MEC225M	630,8
DCP-G 125-5800/A/BAQE/55	620	DN 125	3 x 400 V ~ [1]	2985	68,2	55	75	94,6	IE3	MEC250M	684

[1] star start-up possible (λ)

MODEL	A	B	B1	B2	B max	C	D	D1	D2	D3	D4	no. of holes	H	H1	H2	L	L1	L2	M	N	PACKING DIMENSIONS			VOL. (m^3)	WEIGHT Kg
																					L/A	L/B	H		
DCP-G 125-4750/A/BAQE/37	500	810	515	535	1050	930	100	156	220	180	18	8	1198	175	100	620	266	404	M16	300	620	1050	1188	0,77	863
DCP-G 125-5300/A/BAQE/45	500	810	515	535	1050	930	100	156	220	180	18		1183	175	100	620	266	404	M16	300	620	1050	1178	0,77	1028
DCP-G 125-5800/A/BAQE/55	500	810	554	574	1128	930	100	156	220	180	18		1303	175	100	620	266	404	M16	300	620	1128	1303	0,91	1305

DAB PUMPS reserves the right to make modifications without notice.

K-HA
IN LINE PUMPS

K-HA 20-9

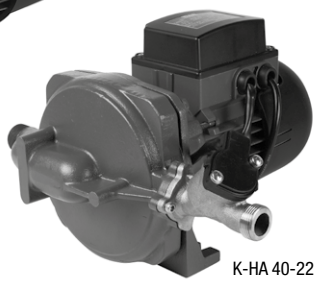
K-HA 40-22

ONLY FOR EXTRA MARKETS EU EXCEPT RUSSIA

TECHICAL DATA

Operating range: up to 4,2 m3/h with head up to 22m
Liquid quality requirements: clean, free from solids or abrasive substances, non viscous, non aggressive, non crystallized, chemically neutral, close to the characteristics of water
Liquid temperature range: from 0°C to +100 °C
Ambient temperature: from -10°C to +55 °C
Enviroment humidity: ≤ 95%
Maximum operating pressure: 4 bar (35° C liquid temperature), 2 bar (65° C liquid temperature)
Minimum automatic (flow switch) operating pressure: 0,5 mwc
Minimum automatic (flow switch) operating flow: 2,5 l/min

APPLICATIONS
K-HA single impeller centrifugal pump is designed for water pressure boosting in households, flats (domestic properties) to provide additional pressure to hot and cold water taps and similar outlet points. K-HA centrifugal pump is mainly for use in open vented systems(tanks), but may also be installed directly on the incoming water mains supply to feed a boiler, provided approval has been obtained from the local Water Company. The pump incorporates a flow switch which starts and stops the pump according to flow when a tap is opened or closed. The pump is supplied with a 0,3 meter power cable.

CONSTRUCTION FEATURES OF THE PUMP
- Cast iron pump body and motor support with cataphoresis coating.
- Brass flow switch body.
- Technopolymer impeller.
- Carbon / ceramic mechanical seal.

PLUS
- Flow switch in brass, directly assembled on the delivery port of the pump body (45° from vertical)
- Automatic (by flow switch) or manual operating modes
- Easy way fixing bracket
- Rubber foot to increase pump stability
- Silent operating

CONSTRUCTION FEATURES OF THE MOTOR
Induction motor, closed and cooled with external ventilation.
Rotor mounted on oversized greased sealed-for-life ball bearings to ensure silent running and long life.
Built-in thermal and current overload protection and a capacitor permanently in circuit.
Motor protection: IP 44.
Insulation class: F.
Standard voltage: single phase ~220V / 50 Hz.
Motor construction in conformity with standards CEI 2-3 - CEI 61-69 (EN 60335-2-41).

MATERIALS

N.	PARTS *	MATERIALS
1	PUMP BODY	CAST IRON WITH CATAPHORESIS COATING
3	SUPPORT	CAST IRON WITH CATAPHORESIS COATING
4	IMPELLER	TECHNOPOLYMER B
7	SHAFT	STAINLESS STEEL AISI 412 X12CrS13 UNI 6900/71
16	MACHANICAL SEAL	CARBON/CERAMIC/HNBR
28	O-RING	NBR RUBBER

* In contact with liquid.

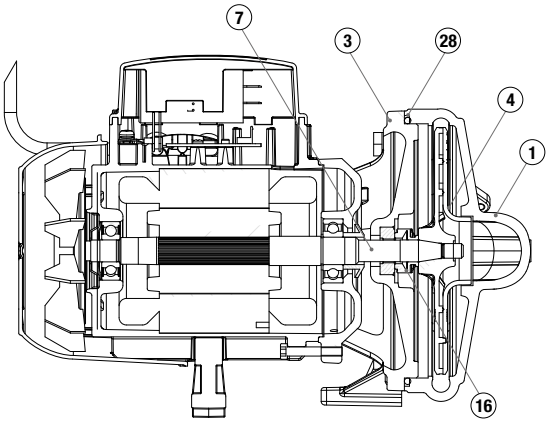

K-HA - IN LINE PUMPS

Liquid temperature range: from 0 °C to +100 °C - **Maximum ambient temperature:** from -10 °C to +55 °C

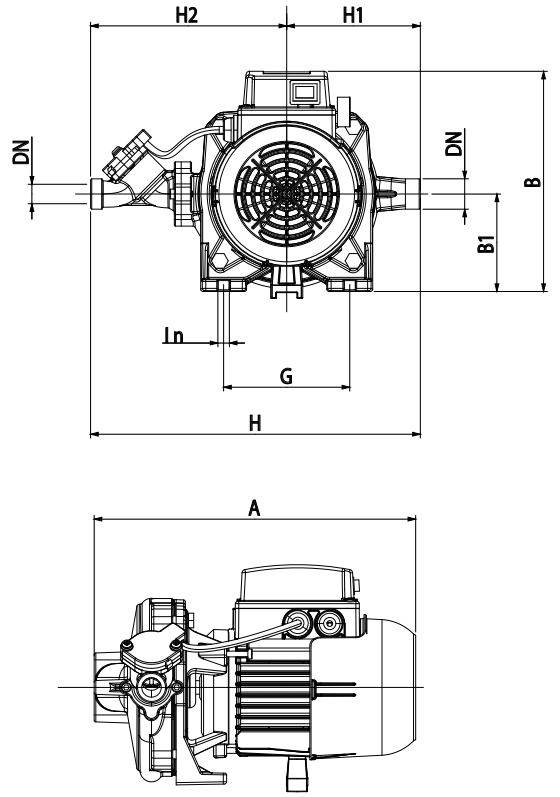

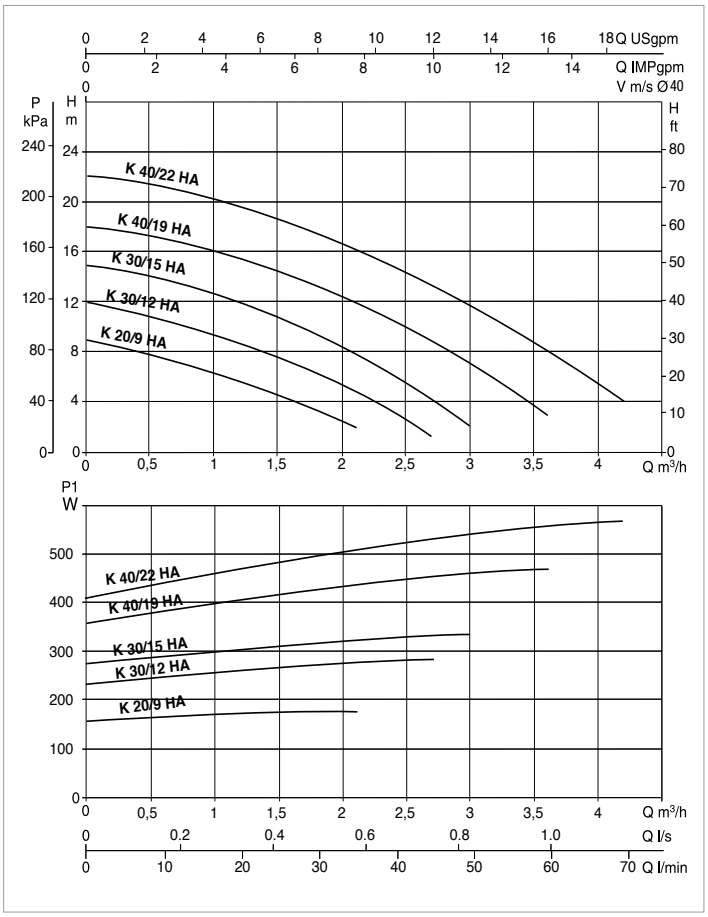

The performance curves are based on kinematic viscosity values = 1 mm²/s and density equal to 1000 kg/m³.
Curve tolerance according to ISO 9906.

MODEL	Q=m³/h	0	0,5	1	1,5	2	2,5	3	3,5	4
	Q=l/min	0	8,3	16,6	25	33,3	41,6	50	58,3	66,6
K 20/9 HA	H (m)	8,9	7,8	6,3	4,5	2,5				
K 30/12 HA		12	10,8	9,3	7,6	5,4	2,6			
K 30/15 HA		14,8	14,1	12,7	10,7	8,4	5,4			
K 40/19 HA		18	17,3	16,1	14,4	12,4	10	7	3,6	
K 40/22 HA		22	21,4	20,2	18,6	16,6	14,3	11,7	8,7	5,5

MODEL	VOLTAGE 50 Hz	P1 MAX kW	P2 NOMINAL		In A	I st. A	cos ϕ	CAPACITOR (µF)	HOSE DIAMETER (mm)	MAXIMUM FLOW RATE (m³/h)	MAXIMUM HEAD (m)
			KW	HP							
K 20/9 HA	220 V	0,18	0,09	0,12	0,82	2,89	0,926	8	ø 16 mm	2,10	9
K 30/12 HA	220 V	0,28	0,12	0,16	1,28	4,09	0,969	8	ø 16 mm	2,40	12
K 30/15 HA	220 V	0,34	0,18	0,25	1,50	4,09	0,980	8	ø 16 mm	3,00	15
K 40/19 HA	220 V	0,47	0,25	0,34	2,25	7,60	0,905	8	ø 16 mm	3,60	18
K 40/22 HA	220 V	0,57	0,37	0,50	2,54	7,60	0,932	8	ø 16 mm	4,20	22

MODEL	A	B	B1	DN	G	H	H1	H2	I Ø	WEIGHT (Kg)
K 20/9 HA	253	172	65	G ¾"	70	231	83	148	8	5,4
K 30/12 HA	282	192	85	G ¾"	110	287,5	116,5	171	9,5	7,9
K 30/15 HA	282	192	85	G ¾"	110	287,5	116,5	171	9,5	7,9
K 40/19 HA	280,5	192	85	G ¾"	110	287,5	116,5	171	9,5	8,9
K 40/22 HA	280,5	192	85	G ¾"	110	287,5	116,5	171	9,5	8,9

DAB PUMPS reserves the right to make modifications without notice.

NOTES

HYDRAULIC EFFICIENCY

EU 547/2012 REGULATION - MEI

GENERAL INFORMATION

The MEI index (Minimum Efficiency Index) was issued with the objective of defining a performance threshold value applicable to all the water pumps found on the market. The MEI index takes into account the size of the pump, its specific speed, and its speed of rotation.
The regulation applies to centrifugal pumps used for pumping clean waters included in the following categories:

- Axial suction pumps with support (ESOB - End Suction Own Bearings)
- Horizontal monobloc axial suction pumps (ESCC - End Suction Close Coupled)
- In-line monobloc axial suction pumps (ESCCI End Suction Close Coupled Inline)
- Multistage vertical pumps (MS-V - Vertical multistage)
- Multistage submerged pumps (MSS - Submersible multistage)

MEI is a dimensionless indicator for hydraulic performance, and a measure of the quality of the sizing of the pump in relation to the performance.
The higher the MEI value, the better is the sizing of the pump in relation to the performance, and the lower is the annual energy consumption due to the use of the pump. In theory, the upper limit of the MEI values is open, and only depends on physical and technological limitations.

The minimum efficiency index (MEI) is based on the maximum diameter of the impeller.

The value of reference for the more efficient water pumps is MEI ≥ 0,70.

The efficiency of a pump with turned impeller is generally lower to that of a pump with full impeller diameter. The turning of the impeller adapts the pump to a fixed point of operation, resulting in lower energy consumption.

The operation of this water pump with variable operating points can be more efficient and economical if controlled, for example, by means of a variable speed motor adapting the operation of the pump to the system.

The information on the efficiency of reference can be found at the address: **www.dabpumps.com**. In alternative contact your local sales representatives.

The MEI=0,7 and MEI=0,4 efficiency charts for the different types of pumps can be found at the website: **www.europump.org/efficiencycharts**

		PUMP MODEL	IMPELLER	MEI	η PL	η BEP	η OL
DN 40	2p	**KLP 40/1800 T**	Full	≥ 0,50	61,1	64,2	63,6
		KLP 40/1800 M	Full		61,0	63,9	63,5
		KLP 40/1600 T	Turned		58,1	61,0	60,3
		KLP 40/1200 T	Turned		56,6	59,6	58,5
		KLP 40/1200 M	Turned		56,6	59,5	58,5
		KLP 40/900 T	Turned		52,9	54,9	53,7
		KLP 40/900 M	Turned		51,3	54,6	53,3
		KLP 40/600 T	Turned		51,9	54,0	53,0
		KLP 40/600 M	Turned		48,2	51,2	50,6
	4p	**KLM 40/400 T - M**	Full	not applicable	-	-	-
		KLM 40/300 T - M	Turned		-	-	-

		PUMP MODEL	IMPELLER	MEI	η PL	η BEP	η OL
DN 50	2p	**KLP 50/2000 T**	Full	≥ 0,50	66,9	69,4	68,7
		KLP 50/2000 M	Full		66,7	69,1	68,4
		KLP 50/1600 T	Turned		65,7	68,2	67,3
		KLP 50/1600 M	Turned		65,9	68,3	67,4
		KLP 50/1200 T	Turned		63,2	66,9	65,2
		KLP 50/1200 M	Full		62,8	65,4	64,8
		KLP 50/900 T	Turned		62,2	64,9	64,2
		KLP 50/900 M	Turned		58,8	61,4	60,8
	4p	**KLM 50/600 T**	Full	≥ 0,60	60,6	64,0	63,5
		KLM 50/600 M	Full		57,6	61,6	61,1
		KLM 50/300 T	Turned		45,4	48,7	48,1
		KLM 50/300 M	Turned		42,4	45,7	45,1

		PUMP MODEL	IMPELLER	MEI	η PL	η BEP	η OL
DN 65	2p	**KLP 65/2000 T**	Full	≥ 0,50	68,50	72,30	71,50
		KLP 65/1600 T	Turned		68,0	71,0	69,6
		KLP 65/1200 T	Turned		64,5	69,2	68,1
		KLP 65/900 T	Turned		61,4	65,4	64,6
	4p	**KLM 65/600 T**	Full	≥ 0,60	65,9	68,6	67,9
		KLM 65/300 T	Turned		56,2	59,7	58,7

HYDRAULIC EFFICIENCY

EU 547/2012 REGULATION - MEI

		PUMP MODEL	IMPELLER	MEI	η PL	η BEP	η OL
DN 80	2p	KLP 80/2000 T	Full	≥ 0,60	72,9	76,4	75,9
		KLP 80/1600 T	Turned		69,4	73,4	72,7
		KLP 80/1200 T	Turned		66,6	70,6	69,2
		KLP 80/900 T	Turned		65,5	69,2	68,9
	4p	KLM 80/600 T	Full	≥ 0,60	70,4	73,1	72,6
		KLM 80/300 T	Turned		66,3	67,9	66,3

		PUMP MODEL	IMPELLER	MEI	η PL	η BEP	η OL
DN 40	2p	CP 40/6200 T	Full	≥ 0,40	51,6	54,1	53,6
		CP 40/5500 T	Turned		49,8	52,6	52,3
		CP 40/4700 T	Turned		53,0	54,2	54,1
		CP 40/3800 T	Full	≥ 0,40	51,0	53,5	53,1
		CP 40/3500 T	Full	≥ 0,60	53,5	56,6	56,3
		CP 40/2700 T	Turned		54,3	56,7	56,2
		CP 40/2300 T	Turned		52,1	54,7	54,0
		CP 40/1900 T	Turned		51,5	54,8	54,4
		DCP 40/2450 T	Full	≥ 0,40	57,3	60,8	60,4
		DCP 40/2050 T	Turned		57,9	60,8	60,4
		DCP 40/1650 T	Turned		51,0	53,1	52,6
		DCP 40/1250 T	Turned		49,9	52,6	52,2
	4p	CM 40-1450 T	Full	≥ 0,40	52,2	54,3	54,0
		CM 40-1300 T	Turned		48,1	50,5	50,0
		CM 40-870 T	Full	≥ 0,60	52,7	55,5	55,1
		CM 40-670 T	Turned		53,4	55,9	55,4
		CM 40-540 T	Turned		53,8	56,0	55,7
		CM 40-440 T	Turned		51,5	54,0	53,6
		DCM 40-620 T	Full	≥ 0,40	61,8	64,5	64,1
		DCM 40-460 T	Turned		58,9	61,7	61,2
		DCM 40-380 T	Turned		57,8	60,3	59,9

		PUMP MODEL	IMPELLER	MEI	η PL	η BEP	η OL
DN 50	2p	CP 50/5650 T	Full	≥ 0,40	56,7	59,5	58,7
		CP 50/5100 T	Turned		55,1	58,2	57,6
		CP 50/4600 T	Turned		56,0	59,1	58,7
		CP 50/4100 T	Full	≥ 0,60	54,1	57,1	56,7
		CP 50/3100 T	Turned		49,6	51,8	51,2
		CP 50/2600 T	Turned		47,2	51,7	51,1
		CP 50/2200 T	Turned		46,2	49,4	49,0
		DCP 50/2450 T	Full	≥ 0,40	63,8	67,4	66,6
		DCP 50/1900 T	Turned		65,0	68,0	67,6
		DCP 50/1550 T	Turned		61,8	65,0	64,5
		DCP 50/3650 T	Full	≥ 0,40	61,8	67,1	64,0
		DCP 50/3000 T	Turned		60,8	63,8	63,4
	4p	CM 50-1420 T	Full	≥ 0,40	57,3	60,1	59,7
		CM 50-1270 T	Turned		56,8	59,2	58,8
		CM 50-1000 T	Full	≥ 0,60	50,0	52,8	52,3
		CM 50-780 T	Turned		42,3	45,6	45,0
		CM 50-630 T	Turned		38,3	41,0	40,4
		CM 50-510 T	Turned		35,0	37,7	37,1
		DCM 50-880 T	Full	≥ 0,40	57,2	60,2	59,6
		DCM 50-630 T	Full	≥ 0,40	62,7	65,8	65,2
		DCM 50-460 T	Turned		59,9	62,3	61,8

DAB PUMPS reserves the right to make modifications without notice.

HYDRAULIC EFFICIENCY

EU 547/2012 REGULATION - MEI

		PUMP MODEL	IMPELLER	MEI	η PL	η BEP	η OL
DN 65	2p	CP-G 65- 9250 T	Full	≥ 0,60	64,5	67,4	66,6
		CP-G 65- 7350 T	Turned		64,1	67,0	66,5
		CP-G 65- 6750 T	Turned		63,8	66,8	66,2
		CP-G 65- 6150 T	Turned		63,2	66,5	65,8
		CP-G 65- 5500 T	Turned		62,9	66,2	65,4
		CP-G 65- 4700 T	Turned		56,9	59,6	59,1
		CP-G 65- 4100 T	Full	≥ 0,60	67,9	71,2	70,7
		CP-G 65- 3400 T	Turned		66,6	71,0	70,0
		CP-G 65- 2640 T	Turned		66,3	69,5	69,5
		CP-G 65- 2280 T	Turned		65,6	68,5	68,5
		CP-G 65- 1900 T	Turned		64,6	67,8	67,5
		CP-G 65- 1470 T	Turned		63,5	67,3	66,7
	4p	CM-G 65- 2380 T	Full	≥ 0,60	70,6	71,9	71,7
		CM-G 65- 1680 T	Turned		68,5	70,6	70,2
		CM-G 65- 1530 T	Turned		60,7	63,1	62,6
		CM-G 65- 1200 T	Turned		58,8	61,5	61,0
		CM-G 65- 1080 T	Turned		58,0	61,5	60,4
		CM-G 65- 920 T	Full	≥ 0,60	68,8	72,2	71,5
		CM-G 65- 760 T	Turned		64,3	68,5	68,0
		CM-G 65- 660 T	Turned		64,0	67,0	66,0
		CM-G 65- 540 T	Turned		61,5	65,3	64,6
		CM-G 65- 420 T	Turned		56,4	60,6	59,8

		PUMP MODEL	IMPELLER	MEI	η PL	η BEP	η OL
DN 80	2p	CP-G 80- 10200 T	Full	≥ 0,40	67,4	71,1	70,4
		CP-G 80- 9600 T	Full	≥ 0,40	67,2	71,8	70,7
		CP-G 80- 8600 T	Turned		64,2	67,7	67,1
		CP-G 80- 6850 T	Full	≥ 0,40	71,3	74,4	73,6
		CP-G 80- 5650 T	Turned		70,5	73,4	72,9
		CP-G 80- 5150 T	Turned		69,3	72,5	71,3
		CP-G 80- 4000 T	Full	≥ 0,60	74,7	79,2	78,3
		CP-G 80- 3250 T	Turned		72,3	76,7	75,8
		CP-G 80- 2770 T	Turned		71,2	75,3	74,5
		CP-G 80- 2400 T	Full	≥ 0,60	75,4	78,8	78,5
		CP-G 80- 2050 T	Turned		73,6	78,2	76,9
		CP-G 80- 1700 T	Turned		72,8	78,1	76,9
		CP-G 80- 1400 T	Turned		57,0	61,2	60,4
	4p	CM-G 80- 3420 T	Full	≥ 0,60	68,5	71,6	71,0
		CM-G 80- 2700 T	Turned		65,9	70,6	69,8
		CM-G 80- 2410 T	Full	≥ 0,40	65,8	69,4	68,8
		CM-G 80- 1700 T	Full	≥ 0,60	82,0	83,5	83,3
		CM-G 80- 1530 T	Turned		75,8	78,6	77,9
		CM-G 80- 1050 T	Full	≥ 0,60	75,2	79,0	78,3
		CM-G 80- 890 T	Turned		73,0	76,8	76,1
		CM-G 80- 740 T	Turned		61,4	65,8	65,0
		CM-G 80- 650 T	Full	≥ 0,60	72,9	75,7	75,1
		CM-G 80- 550 T	Turned		69,4	73,5	72,7

DAB PUMPS reserves the right to make modifications without notice.

HYDRAULIC EFFICIENCY

EU 547/2012 REGULATION - MEI

		PUMP MODEL	IMPELLER	MEI	η PL	η BEP	η OL
DN 100	2p	CP-G 100- 8300 T	Full	≥ 0,40	72,6	76,6	75,5
		CP-G 100- 6300 T	Full	≥ 0,40	72,1	75,9	74,9
		CP-G 100- 5600 T	Turned		69,5	72,8	72,3
		CP-G 100- 4800 T	Turned		68,5	70,0	69,1
		CP-G 100- 3850 T	Full	≥ 0,60	75,7	82,5	81,3
		CP-G 100- 3550 T	Turned		75,0	80,6	79,5
		CP-G 100- 3050 T	Turned		71,7	76,9	76,1
		CP-G 100- 2400 T	Turned		66,1	71,8	70,9
		CP-G 100- 2350 T	Full	≥ 0,50	71,2	76,3	75,5
		CP-G 100- 1950 T	Turned		68,7	73,2	72,4
		CP-G 100- 1600 T	Turned		64,6	67,1	66,5
	4p	CM-G 100- 4100 T	Full	≥ 0,40	70,8	75,1	74,1
		CM-G 100- 3680 T	Turned		69,2	74,0	73,2
		CM-G 100- 3290 T	Turned		68,0	73,0	72,5
		CM-G 100- 2550 T	Full	≥ 0,40	72,5	76,1	75,2
		CM-G 100- 2050 T	Turned		70,7	75,0	74,1
		CM-G 100- 1650 T	Full	≥ 0,60	71,7	76,3	75,5
		CM-G 100- 1320 T	Turned		69,0	74,3	72,5
		CM-G 100- 1020 T	Full	≥ 0,60	81,2	85,0	84,3
		CM-G 100- 865 T	Turned		71,5	73,9	73,9
		CM-G 100- 660 T	Turned		68,2	74,6	73,5
		CM-G 100- 650 T	Full	≥ 0,60	72,8	78,8	77,8
		CM-G 100- 510 T	Turned		65,1	70,9	69,9

		PUMP MODEL	IMPELLER	MEI	η PL	η BEP	η OL
DN 125	2p	CP-G 125- 5800 T	Full	≥ 0,50	76,5	81,6	80,2
		CP-G 125- 5300 T	Turned		75,2	78,7	77,9
		CP-G 125- 4750 T	Turned		72,1	76,2	75,3
	4p	CM-G 125- 4022 T	Full	≥ 0,40	70,7	74,2	73,7
		CM-G 125- 3600 T	Turned		71,5	73,3	72,4
		CM-G 125- 3200 T	Turned		70,8	73,5	73,1
		CM-G 125- 2550 T	Full	≥ 0,40	69,9	73,2	72,2
		CM-G 125- 2100 T	Turned		66,8	69,4	69,1
		CM-G 125- 1560 T	Full	≥ 0,60	78,5	85,0	84,0
		CM-G 125- 1270 T	Turned		73,3	78,0	77,1
		CM-G 125- 1075 T	Turned		72,3	77,0	76,2

		PUMP MODEL	IMPELLER	MEI	η PL	η BEP	η OL
DN 150	4p	CM-G 150- 2405 T	Full	≥ 0,60	79,7	85,9	84,8
		CM-G 150- 2200 T	Turned		76,3	81,7	80,7
		CM-G 150- 1950 T	Turned		75,9	80,6	79,7
		CM-G 150- 1600 T	Turned		72,2	77,1	76,3
		CM-G 150- 1322 T	Turned		70,8	74,6	73,3
		CM-G 150- 955 T	Turned		63,7	66,9	66,4

DAB PUMPS reserves the right to make modifications without notice.

NOTES

DAB PUMPS reserves the right to make modifications without notice.

ACCESSORIES

UNION KITS	DESCRIPTION	MODEL	WEIGHT Kg	Q.TY X BOX
	UNION KITS 1" 1/4 F	ALM 500 - ALP 2000	0,7	24

UNION CONNECTOR KITS - BRASS	DESCRIPTION	MODEL	WEIGHT Kg	Q.TY X BOX
	UNION CONNECTOR KITS ½" F BRASS	ALM 200 - 800	0,4	24
	UNION CONNECTOR KITS ¾ " F BRASS	ALM 200 - 800	0,4	24
	UNION CONNECTOR KITS 1" F BRASS	ALM 200 - 800	0,4	24

UNION CONNECTOR KITS - COPPER	DESCRIPTION	MODEL	WEIGHT Kg	Q.TY X BOX
	COPPER UNION CONNECTOR KITS - WELDED - diam. 22	ALM 200 - 800	0,4	24
	COPPER UNION CONNECTOR KITS - WELDED - diam. 28	ALM 200 - 800	0,4	24

COMPENSATION KIT

Compensation spacer to be used to compensate for any space requirement differences when replacing old models with new models.

DESCRIPTION	CM Previous model		CM New Model		LENGTH
	DN	CENTRE DISTANCE	DN	CENTRE DISTANCE	
KIT N° 1	65	475	65	360	115
KIT N° 2	80	525	80	360	165
KIT N° 3				440	85
KIT N° 4				500	25
KIT N° 5	100	550	100	500	50
KIT N° 6		630		550	80

COMMERCIAL MAGNETIC FILTERS

DESCRIPTION	MODEL
2" MAGNACLEAN (DN 50 CP1 – 03 -01123)	IN-LINE PUMPS
3" MAGNACLEAN (DN 80 CP1 – 03 -01124)	
4" MAGNACLEAN (DN 100 CP1 – 03 -01125)	

DAB PUMPS reserves the right to make modifications without notice.

COUNTER-FLANGE KIT *	DESCRIPTION	MODEL	WEIGHT Kg	Q.TY X PALLET
KIT CONTROFLANGE DN50 PN 10	**DN40 PN 10 COUNTER FLANGE KIT**	KLM 40/300 - DKLM 40/300 KLP 40/600 - DKLP 40/600 KLP 40/900 - DKLP 40/900 KLP 40/1200 - DKLP 40/1200	2,4	180
	DN50 PN 10 COUNTER FLANGE KIT	KLM 50/300 - DKLM 50/300 KLM 50/600 - DKLM 50/600 KLP 50/900 - DKLP 50/900 KLP 50/1200 - DKLP 50/1200	3,2	180
	DN65 PN 10 COUNTER FLANGE KIT	KLM 65/300 - DKLM 65/300 KLM 65/600 - DKLM 65/600 KLP 65/900 - DKLP 65/900 KLP 65/1200 - DKLP 65/1200	4,0	180
	DN80 PN 10 COUNTER FLANGE KIT	KLM 80/300 - DKLM 80/300 KLM 80/600 - DKLM 80/600 KLP 80/900 - DKLP 80/900 KLP 80/1200 - DKLP 80/1200	4,8	180
	DN40 - PN16 COUNTER FLANGE KIT	CM - CP 40	5,3	90
	DN50 - PN16 COUNTER FLANGE KIT	CM - CP 50	6,3	90
KIT CONTROFLANGE DN 80 PN 16	**DN65 - PN16 COUNTER FLANGE KIT**	CM 65 - CP 65	7,5	90
	DN80 PN 16 COUNTER FLANGE KIT	CM 80 - CP 80	9,5	64
	DN100 PN 16 COUNTER FLANGE KIT	CM 100 - CP 100	10,9	64
	DN125 - PN16 COUNTER FLANGE KIT	CM 125 - CP 125	14,5	40
	DN150 - PN16 COUNTER FLANGE KIT	CM 150 - CP 150	18,6	40

* The counter flange kit includes: two counter flanges, nuts and bolts

ELECTRIC PROTECTION AND CONTROL PANELS

E.BOX

TECHNICAL DATA

Nominal power input voltage:
e.box plus 1x 230 V / 3 x 230 V - 3 x 400 V (automatic selection)
e.box basic 1x 230 V
Frequency: 50 - 60 Hz
Maximum power of use:
e.box plus 5,5 kWatt + 5,5 kW
e.box basic 2,2 kWatt + 2,2 kW
Maximum current of use: 12 A + 12 A
Starting capacitor: Supplied as accessory KIT
Ambient temperature operation limits: -10 °C + 40 °C
Air relative humidity: 90 % at 20 °C
Max. altitude: 1000 a.s.l.
Protection class: IP 55
Standard of reference for the construction of the control panels EN 60335-1.

APPLICATIONS

E.box is an electronic control panel that provides all the functions and protections required for the installation of a pumping set for draining, filling, and pressurisation purposes.
E.BOX PLUS is an electric control panel for automatic protection and operation of one or more submersible electric pumps or pressure booster pumps, both single and three phase, for domestic, civil, and industrial applications. Thanks to the current regulation possibility, the e.box control panel is compatible with all pump models with current between 1 and 12 A, with power up to 5,5 kW.
E.BOX BASIC is an electric control panel for automatic protection and operation of one or more single phase submersible electric pumps or pressure booster pumps for domestic applications. The e.box control panel is compatible with all single phase pump models with current between 1 and 12 A, with power up to 2,2 kW, as indicated in the product compatibility table.

CONTROL PANEL CONSTRUCTION

Supplied in an IP 55 protection class self-extinguishing thermoplastic material box, the control panel protects the electric pumps from abnormal conditions such as: overload and overtemperature (with automatic reset), short circuit (with fuses - Plus model only), pump current surges (amperometric protection), abnormal voltage, dry run, quick starts, pressure sensor fault, or inconsistency of the external protection commands.

FRONT PANEL COMPONENTS
- General disconnector with padlockable door lock.
- AUT-0-MAN operation selection pushbuttons.
- Alarm RESET pushbutton.
- Operation, stop, alarm notification lamps.

PANEL INTERNAL COMPONENTS
- Electronic control card with protection fuses and contactors.
- Power input connection terminals, single phase (L-N in the Basic version), or three phase (L1-L2-L3 in the Plus version).
- Electric pump connection terminals, single phase (L-N in the BASIC version), or three phase (L1-L2-L3 in the PLUS version).
- Terminals for the connection of pressure switches, sensors, KK thermal protection, alarm notification N.O. contacts. Operation selection dip switch: level floats or sensor, tank filling and emptying, operation with one or two pumps.

SOFTWARE
For the models with display, the software
- During the first installation, provides step by step guidance in the selection of the correct settings based on the actual application.
- Makes the status of the control panel and the pumps clearly and immediately visible.
- When compared to the previous model, makes it easier to change the level settings, as operation of the control panel dip switch is no longer required.

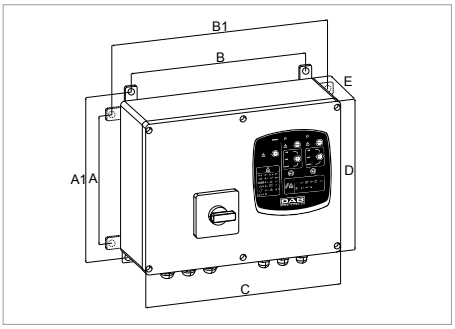

MODEL	A	A1	B	B1	C	D	E	PACKING DIMENSIONS			WEIGHT kg
								L/A	L/B	H	
E.BOX BASIC 230/50-60	212	265	282	337	320	260	120	250	430	310	4
E.BOX PLUS 230-400V/50-60	212	265	282	337	320	260	120	250	430	310	5

MODEL	ELECTRICAL DATA					
	POWER INPUT 50 HZ	STARTING	P2 NOMINAL		MAX CURRENT A	TO BE USED FOR:
			kW x2	HP x2		
E.BOX BASIC 230/50-60	1X230 V~	direct	2,2	3	12+12	DKLM-DKLP single-phase
E.BOX PLUS 230-400V/50-60	1X230 V~	direct	2,2	3	12+12	DKLM-DKLP single-phase
	3X230 V~		3	4		DKLM-DKLP three-phase
	3X400 V~		5,5	7,5		DCM three-phase 400V

DAB PUMPS reserves the right to make modifications without notice.

ED - CONTROL PANLES X 1 PUMP

ELECTRIC PROTECTION AND CONTROL PANELS

Explicative photo

TECHNICAL DATA

Supplied on self-extinguishing thermoplastic material box with wall fastening bracket. The control panel is self-protected and protects the electric pump from overloads and short circuits, with the possibility of manual reset.

Complete with:

- Power line disconnection device with padlockable door lock handle (except in the single-phase version)
- Self-protected transformer to provide supply for external controls
- Terminals for the connection of the electric pump and the minimum/ maximum level float switches.
- Terminals without potential for the alarm command and the remote installation of a sound/visual alarm.
- Front panel pushbutton for manual operation (single-phase version)
- Front panel selector for Manual operation
- 0 - Automatic
- Overload protection notification
- Pump in operation notification
- Voltage present warning

Ambient temperature operation limits: -10°C +40°C
Protection class: IP55

MODEL	POWER INPUT 50 HZ	STARTING	P2 NOMINAL		MAXIMUM CURRENT A	TO BE USED WITH MODELS	
			kW	HP			
ED1,3M	1 X 230 V	DIRECT	1	1,36	9	ALM 200 M	ALP 800 M
						ALM 500 M	ALP 2000 M
						KLM 40/300 M	KLP 40/600 M
ED1T	3 x 400 V	DIRECT	0,74	1	2,5	ALM 200 T	ALP 800 T
						ALM 500 T	ALM 2000 T
						KLM 40/300 T	KLP 50/900 T
						KLP 40/600 T	KLP 50/1200 T
						KLP 40/900 T	KLM 65/300 T
						KLP 40/1200 T	KLM 60/600 T
						KLM 50/300 T	KLM 80/300 T
						KLM 50/600 T	KLM 80/600 T
						CM 40/440 T	CM-G 65/420 T
						CM 40/540 T	CM-G 65/540 T
						CM 40/670 T	CM-G 65/660 T
						CM 40/870 T	CM-G 65/760 T
						CM 50/510 T	CM-G 65/920 T
						CM 50/630 T	CM-G 80/550 T
						CM 50/780 T	CM-G 80/650 T
						CM 50/1000 T	CM-G 100/510 T
						CM 40/1300 T	CM-G 40/1450 T
						CM 50/1420 T	CM-G 50/1270 T
ED1,5T	3 x 400 V	DIRECT	1,1	1,5	4	KLP 65/900 T	KLP 65/1200 T
						CM-G 65/1080 T	CM 40/3500 T
						CM-G 80/740 T	CM 50/2200T
						CM-G 100/650 T	CM 50/3100 T
						CM-G 65/760 T	CM-G 65/1470 T
						CM 40/2300 T	-
ED2,5T	3 x 400 V	DIRECT	1,8	2,5	6,3	KLP 80/900 T	KLP 80/1200 T
						CM-G 65/1200 T	CM-G 80/1050 T
						CM-G 65/1530 T	CM-G 100/660 T
						CM-G 80/890 T	CM-G 100/865 T
						CP 40/2700 T	CP 50/4100 T
						CP 40/3800 T	CP-G 65/1900 T
						CP 40/4700 T	CP-G 80/1400 T
						CP 50/2600 T	-

For control panels with higher powers contact our sales network.

DAB PUMPS reserves the right to make modifications without notice.

NOTES

DAB PUMPS reserves the right to make modifications without notice.

NOTES

DAB PUMPS reserves the right to make modifications without notice.

NOTES

DAB PUMPS reserves the right to make modifications without notice.

FSC
www.fsc.org
MIX
Paper from
responsible sources
FSC® C041300

Via Marco Polo, 14 - 35035 Mestrino (PD) Italy - Tel. +39.049.5125000 - Fax +39.049.5125950
www.dabpumps.com

PUMPS SELECTOR

On-line product selection

DAB PUMPS LTD.
6 Gilberd Court
Newcomen Way
Severalls Business Park
Colchester
Essex
CO4 9WN - UK
salesuk@dwtgroup.com
Tel. +44 0333 777 5010

DAB PUMPS BV
'tHofveld 6 C1
1702 Groot Bijgaarden - Belgium
info.belgium@dwtgroup.com
Tel. +32 2 4668353

DAB PUMPS B.V.
Albert Einsteinweg, 4
5151 DL Drunen - Nederland
info.netherlands@dwtgroup.com
Tel. +31 416 387280
Fax +31 416 387299

DAB PUMPEN DEUTSCHLAND GmbH
Tackweg 11
D - 47918 Tönisvorst - Germany
info.germany@dwtgroup.com
Tel. +49 2151 82136-0
Fax +49 2151 82136-36

DAB PUMPS IBERICA S.L.
Calle Verano 18-20-22
28850 - Torrejón de Ardoz - Madrid
Spain
Info.spain@dwtgroup.com
Tel. +34 91 6569545
Fax: + 34 91 6569676

DAB PUMPS HUNGARY KFT.
H-8800
Nagykanizsa, Buda Ernő u.5
Hungary
Tel. +36 93501700

DAB PUMPS POLAND Sp. z o.o.
Ul. Janka Muzykanta 60
02-188 Warszawa - Poland
polska@dabpumps.com.pl

OOO DAB PUMPS
Novgorodskaya str. 1, block G
office 308, 127247, Moscow - Russia
info.russia@dwtgroup.com
Tel. +7 495 122 0035
Fax +7 495 122 0036

DAB PUMPS INC.
3226 Benchmark Drive
Ladson, SC 29456 - USA
info.usa@dwtgroup.com
Tel. 1- 843-797-5002
Fax 1-843-797-3366

DAB PUMPS SOUTH AFRICA (PTY) LTD
Twenty One industrial Estate,
16 Purlin Street, Unit B, Warehouse 4
Olifantsfontein -1666 - South Africa
info.sa@dwtgroup.com
Tel. +27 12 361 3997

DAB PUMPS (QINGDAO) CO. LTD.
No.40 Kaituo Road, Qingdao Economic & Technological
Development Zone
Qingdao City, Shandong Province - China
PC: 266500
sales.cn@dwtgroup.com
Tel. +86 400 186 8280
Fax +86 53286812210

DAB PUMPS DE MÉXICO, S.A. DE C.V.
Av Amsterdam 101 Local 4
Col. Hipódromo Condesa,
Del. Cuauhtémoc CP 06170
Ciudad de México
Tel. +52 55 6719 0493

DAB PUMPS OCEANIA PTY LTD
426 South Gippsland Hwy,
Dandenong South VIC 3175 – Australia
info.oceania@dwtgroup.com
Tel. +61 1300 378 677

60171420 - 04/2019